WPG5
13.4 SEER2 Single-Packaged Air Conditioner and Gas Furnace System with R-454B Refrigerant
Single Phase 2-5 Nominal Tons (Sizes 24-60)

EcoTemp

Product Data

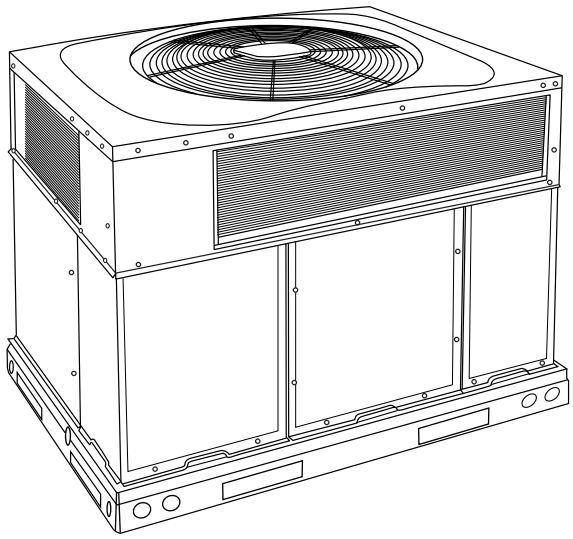

A09183

Fig. 1 – Unit WPG5
(Low NOx Model Available)

Single-Packaged Products with Energy-Saving Features and R-454B refrigerant.

- 13.4 SEER2
- 11.05 EER2
- 81.0% AFUE
- ECM Motor-Standard
- Direct Spark Ignition
- Low Sound Levels
- Dehumidification Feature
- Cabinet air leakage of 2.0% or less at .5 in. W.C. when tested in accordance with ASHRAE standard 193.
- Refrigerant leak detection dissipation system for added safety
- Maximum allowed elevation is 10,000 ft (3,048m) above sea level

Features/Benefits

One-piece heating and cooling units with low sound levels, easy installation, low maintenance, and dependable performance.

R-454B is the latest choice of refrigerant to help meet the 2025 GWP requirement. This unit is designed and tested with R-454B and contains a dissipation system.

Easy Installation

Factory-assembled package is a compact, fully self-contained, combination gas heating/electric cooling unit that is prewired, pre-piped, and pre-charged for minimum installation expense. These units are available in a variety of standard and optional heating/ cooling size combinations with voltage options to meet residential and light commercial requirements. Units are lightweight and install easily on a rooftop or at ground level. The high tech composite base eliminates rust problems associated with ground level applications.

Innovative Unit Base Design

On the inside a high-tech composite material will not rust and incorporates a sloped drain pan which improves drainage and helps inhibit mold, algae and bacterial growth. On the outside metal base rails provide added stability as well as easier handling and rigging.

Convertible duct configuration

Unit is designed for use in either downflow or horizontal applications. Each unit is converted from horizontal to downflow and includes two horizontal duct covers. Downflow operation is provided in the field to allow vertical ductwork connections. The basepan seals on the bottom openings to ensure a positive seal in the vertical airflow mode.

Efficient operation High-efficiency design offers SEER2 (Seasonal Energy Efficiency Ratios) of 13.4, 11.05 EER2, and AFUE (Annual Fuel Utilization Efficiency) ratings of 81.0%.

Energy-saving, direct spark ignition saves gas by operating only when the room thermostat calls for heating. Standard units are furnished with natural gas controls. A low-cost field installed kit for propane conversion is available for all units.

Low NOx units meet 40 ng/J NOx emissions. Can be installed in air quality management districts with a 40 ng/J NOx emissions requirement.

Durable, dependable components

Monoport inshot burners produce precise air-to-gas mixture, which provides for clean and efficient combustion. The large monoport on the inshot (or injection type) burners seldom, if ever, requires cleaning. All gas furnace components are accessible in one compartment.

Turbo-tubular™ heat exchangers are constructed of stainless steel for corrosion resistance and optimum heat transfer for improved efficiency. The tubular design permits hot gases to make multiple passes across the path of the supply air.

In addition, dimples located on the heat exchanger walls force the hot gases to stay in close contact with the walls, improving heat transfer.

ECM Motor is standard on all models.

Direct-drive PSC (Permanent Split Capacitor) condenser-fan motors are designed to help reduce energy consumption and provide for cooling operation down to 40°F (4.4°C) outdoor temperature. low ambient kit is available as a field-installed accessory.

Thermostat controls

Time Guard® II anti-short cycle protection circuitry. If a non-corporate thermostat without anti-short cycle protection is used the Time Guard II field-installed anti-short cycle kit is recommended.

Refrigerant system is designed to provide dependability. Liquid filter driers are used to promote clean, unrestricted operation. Each unit leaves the factory with non-ozone depleting and low global warming potential R-454B refrigerant charge. Refrigerant service connections make checking operating pressures easier. Factory-installed leak detection dissipation system for added safety.

High Pressure Switch provides added reliability for the compressor.

Indoor and Outdoor coils are computer-designed for optimum heat transfer and efficiency. The indoor coil is fabricated from aluminum tube and aluminum fins and is located inside the unit for protection against damage. The outdoor coil is internally mounted on the top tier of the unit.

Low sound ratings ensure a quiet indoor and outdoor environment with sound ratings as low as 69.0 dBA.

Easy to service cabinets provide easy 3-panel accessibility to serviceable components during maintenance and installation. The basepan with integrated drain pan provides easy ground level installation with mounting pad. A nesting feature ensures a positive basepan to roof curb seal when the unit is roof mounted. A convenient 3/4-in. (19.05 mm) wide perimeter flange makes frame mounting on a rooftop easy.

Standard horizontal metal duct covers with insulation come with the unit \and cover the horizontal duct openings. These can be left in place if the units are converted to downflow.

Integrated Gas Control (IGC) board provides safe and efficient control of heating and simplifies trouble-shooting through its built-in diagnostic function.

Cabinets are constructed of heavyduty, phosphated, zinc-coated prepainted steel capable of withstanding 500 hours in salt spray. Interior surfaces of the evaporator/heat exchanger compartment are insulated with cleanable semi-rigid insulation board, which keeps the conditioned air from being affected by the outdoor ambient temperature and provides improved indoor air quality. (Conforms to American Society of Heating, Refrigeration and Air Conditioning Engineers 62.2.) The sloped drain pan minimizes standing water in the drain. An external drain is provided.

Limited Warranty*

- Default 1 year unit replacement
- Default 10 year on heat exchanger
  - -10 year limited warranty on heat exchanger to subsequent owners
- Default 5-year parts limited warranty (including compressor and coil)
  - -10 year parts limited warranty (including compressor and coil) with timely registration. Equipment must be registered within 90 days of original installation, except in jurisdictions where warranty benefits cannot be conditioned on registration.

* Applies to original purchaser/homeowner and 5 years to subsequent owners. See warranty certificate for complete details and restrictions.

Table of Contents

Features/Benefits 1
Model Number Nomenclature 3
AHRI Capacities. 4
Accessories 7
Unit Dimensions 9
Performance Data 13
Application Data. 28
Electrical Data 29
Connection Wiring Schematic 208/230-1-60 30
Controls. 32
Guide Specifications. 33

Model Number Nomenclature

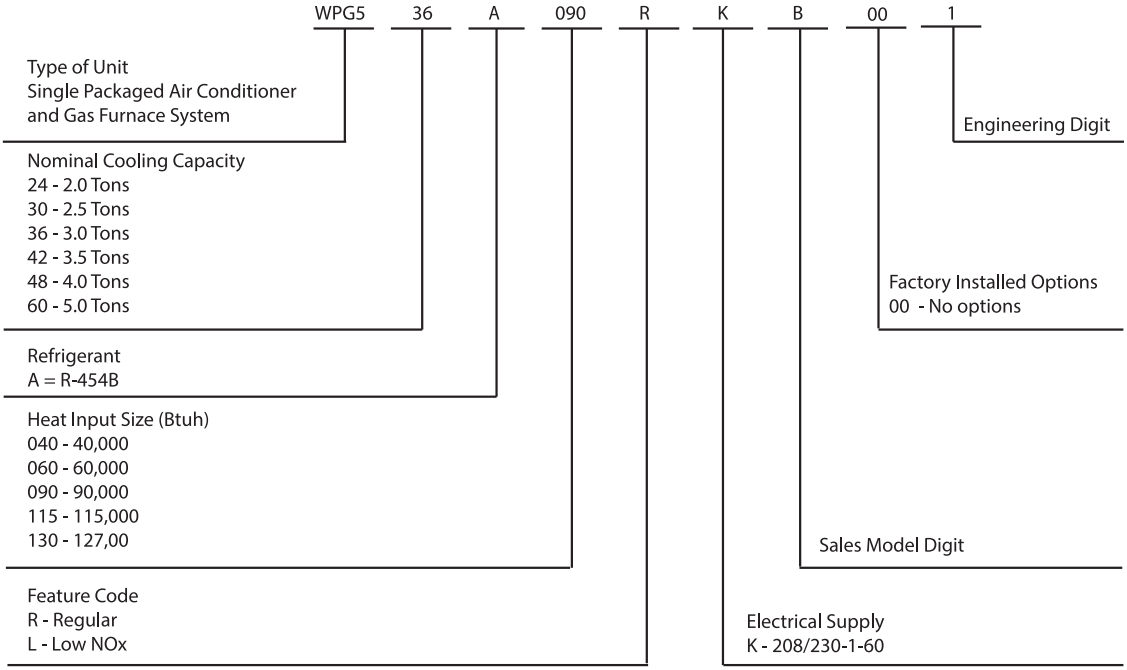

Use of the AHRI Certified TM Mark indicates a manufacturer's participation in the program For verification of certification for individual products, go to www.ahridirectory.org.

For California Residents:

This furnace does not comply with SCAQMD Rule 1111, SJVAPCD Rule 4905, or BAAQMD 9-4, which places a NOx emission limit of 14 ng/J. Therefore, this unit is not eligible to be installed in the South Coast Air Quality Management District (SCAQMD), San Joaquin Valley Air Pollution Control District (SJVAPCD), or Bay Area Air Quality Management District (BAAQMD).

SAP ORDERING NO.	NOMINAL COOLING CAPACITY (Btuh)	NOMINAL HEATING INPUT (BTUH)	VOLTS-PHASE (60 HZ)	APPROX SHIP WT LB
WPG524A040RKB	24,000	40,000	208/230-1	339
WPG524A060RKB	24,000	60,000	208/230-1	339
WPG530A040RKB	30,000	40,000	208/230-1	348
WPG530A060RKB	30,000	60,000	208/230-1	348
WPG536A060RKB	36,000	60,000	208/230-1	410
WPG536A090RKB	36,000	60,000	208/230-1	410
WPG542A060RKB	42,000	60,000	208/230-1	438
WPG542A090RKB	42,000	89,000	208/230-1	438
WPG548A090RKB	48,000	89,000	208/230-1	491
WPG548A115RKB	48,000	89,000	208/230-1	491
WPG548A130RKB	48,000	89,000	208/230-1	491
WPG560A090RKB	60,000	89,000	208/230-1	496
WPG560A115RKB	60,000	89,000	208/230-1	496
WPG560A130RKB	60,000	89,000	208/230-1	496
Low NOx				
WPG524A060LKB	24,000	60,000	208/230-1	339
WPG530A040LKB	30,000	40,000	208/230-1	339
WPG530A060LKB	30,000	60,000	208/230-1	348
WPG536A060LKB	36,000	60,000	208/230-1	348
WPG536A090LKB	36,000	60,000	208/230-1	410
WPG542A060LKB	42,000	60,000	208/230-1	410
WPG542A090LKB	42,000	89,000	208/230-1	438
WPG548A090LKB	48,000	89,000	208/230-1	438
WPG548A115LKB	48,000	89,000	208/230-1	491
WPG548A130LKB	48,000	89,000	208/230-1	491
WPG560A090LKB	60,000	89,000	208/230-1	491
WPG560A115LKB	60,000	89,000	208/230-1	496
WPG560A130LKB	60,000	89,000	208/230-1	496

AHRI* Capacities

Cooling Capacities and Efficiencies

UNIT SIZE	NOMINAL TONS	STANDARD CFM	COOLING CAPACITY (BTUH)†	EER2‡	SEER2**
24	2	750	23200	11.05	13.4
30	2.5	950	28800	11.05	13.4
36	3	1150	34400	11.05	13.4
42	3.5	1350	40000	11.05	13.4
48	4	1600	46000	11.05	13.4
60	5	1750	56000	11.05	13.4

*. Air Conditioning, Heating & Refrigeration Institute.
† Rated in accordance with U.S. Government DOE Department of Energy) test procedures and/or AHRI Standards 210/240.
‡ At "A" conditions-80°F (26.7°C) indoor db/67°F (19.4°C) indoor wb & 95°F (35°C) outdoor db.
** Rated in accordance with AHRI Standard 270.
Notes:
1. Ratings are net values, reflecting the effects of circulating fan heat.
Ratings are based on:
Cooling Standard: 80°F (26.7°C) db, 67°F wb (19.4°C) indoor entering-air temperature and 95°F db (35°C) outdoor entering-air temperature.
2. Before purchasing this appliance, read important energy cost and efficiency information available from your retailer.
LEGEND
dB-Sound Levels (decibels)
db—Dry Bulb
SEER2—Seasonal Energy Efficiency Ratio
wb—Wet Bulb
COP-Coefficient of Performance

Gas Heating Capacities and Efficiencies

UNIT SIZE	HEATING INPUT (Btuh)	OUTPUT CAPACITY (Btuh)	TEMPERATURE RISE RANGE °F (°C)	AFUE (%)
24040 30040	40,000	33,000	25-55 (14-31)	81.0
24060 30060 36060 42060	60,000	49,000	25-55 (14-31)	81.0
36090 42090 48090 60090	90,000	73,000 74,000 74,000 74,000	35-65 (19-36)	81.0
48115 60115	115,000	94,000	30-60 (17-33)	81.0
48130 60130	127,000	104,000	35-65 (19-36)	81.0

LEGEND
AFUE—Annual Fuel Utilization Efficiency
NOTE: Before purchasing this appliance, read important energy cost and efficiency information available from your retailer.

A-Weighted Sound Power Level

UNIT SIZE	STANDARD RATING (dBA)	TYPICAL OCTAVE BAND SPECTRUM (dBA without tone adjustment)						
		125	250	500	1000	2000	4000	8000
24	69	59	62	63	63	61	57	53
30	73	59	63	67	70	64	60	56
36	75	66	69	71	67	64	60	55
42	74	60	63	68	70	65	60	55
48	75	61	64	68	71	66	64	58
60	75	61	66	71	67	65	61	54

NOTE: Tested in compliance with AHRI 270 but not listed with AHRI.

Physical Data

UNIT SIZE	24040	24060	30040	30060	36060	36090	42060	42090
NOMINAL CAPACITY (ton)	2	2	2-1/2	2-1/2	3	3	3-1/2	3-1/2
SHIPPING WEIGHT lb.	339	339	348	348	410	410	438	438
SHIPPING WEIGHT (kg)	154	154	158	158	186	186	199	199
COMPRESSOR / QUANTITY	Scroll / 1							
REFRIGERANT (R-454B)								
Quantity lb.	4.25		4.85		6.25		5.25	
Quantity (kg)	1.9		2.2		2.8		2.4	
REFRIGERANT METERING DEVICE	Orifice							
MINIMUM CONDITIONED SPACE AREA (sq. ft.)	76		76		106		91	
ORIFICE ID in. / mm	.055 / 1.40		.061 / 1.55		.065 / 1.65		.070 / 1.78	
OUTDOOR COIL								
Rows...Fins/in.	1...21	1...21	1...21	1...21	1...21	1...21	1...21	1...21
Face Area (sq ft)	11.9	11.9	13.6	13.6	13.6	13.6	13.6	13.6
OUTDOOR FAN								
Nominal CFM	2500	2500	3200	3200	3500	3500	3500	3500
Diameter in.	24	24	24	24	26	24	26	26
Diameter (mm)	609.6	609.6	609.6	609.6	660.4	609.6	660.4	660.4
Motor Hp (Rpm)	1/12 (810)	1/12 (810)	1/5 (810)	1/5 (810)	1/2 (810)	1/2 (810)	3/4 (810	3/4 (810)
INDOOR COIL								
Rows...Fins/in.	3...17	3...17	3...17	3...17	2...17	2...17	3...17	3...17
Face Area (sq ft)	3.7	3.7	3.7	3.7	5.6	5.6	4.7	4.7
INDOOR BLOWER								
Required Minimum Dissipation Airflow (CFM)	133	133	133	133	186	186	160	160
Nominal Cooling Airflow (CFM)	750	750	950	950	1150	1150	1350	1350
Size in. (D x W)	10x10	10x10	10x10	10x10	11x10	11x10	11x10	11x10
Size mm (D x W)	254x254	254x254	254x254	254x254	279.4x254	279.4x254	279.4x254	279.4x254
Motor HP (RPM)	1/2 (1050)	1/2 (1050)	1/2 (1050)	1/2 (1050)	3/4 (1000)	3/4 (1000)	1/2 (1050)	1/2 (1050)
FURNACE SECTION*								
Burner Orifice No. (Qty...Drill Size)								
Natural Gas (Factory Installed)	2...44	3...44	2...44	3...44	3...44	3...38	3...44	3...38
Propane Gas	2...55	3...55	2...55	3...55	3...55	3...53	3...55	3...53
HIGH-PRESSURE SWITCH (psig) Cut-out Reset (Auto)	650 +/- 15 420 +/- 25							
LOSS-OF-CHARGE / LOW-PRESSURE SWITCH (Liquid Line) (psig) cut-out Reset (auto)	NA							
RETURN-AIR FILTERS† ‡								
Throwaway Size in.	2 each 20x12x1				1 each 24x16x1, 24x18x1		1 each 24x14x1, 24x16x1	
(mm)	508x305x25				610x406x25, 610x457x25		610x356x25, 610x406x25	

*. Based on altitude of 0 to 2000 ft (0-610 m).
†. Required filter sizes shown are based on the larger of the AHRI (Air Conditioning Heating and Refrigeration Institute) rated cooling airflow or the heating airflow velocity of 300 to 350 ft/minute for throwaway type. Air filter pressure drop for non-standard filters must not exceed 0.08 IN. W.C.
‡. If using accessory filter rack refer to the filter rack installation instructions for correct filter sizes and quantity

Manufacturer reserves the right to change, at any time, specifications and designs without notice and without obligations.

Physical Data (Continued)

UNIT SIZE	48090	48115	48130	60090	60115	60130
NOMINAL CAPACITY (ton)	4	4	4	5	5	5
SHIPPING WEIGHT lb SHIPPING WEIGHT kg	491 223	491 223	491 223	496 225	496 225	496 225
COMPRESSOR / QUANTITY	Scroll / 1					
REFRIGERANT (R-454B) Quantity lb Quantity (kg.)	6.55 3.0			8.5 3.9		
MINIMUM CONDITIONED SPACE AREA (sq. ft.)	106			137		
REFRIGERANT METERING DEVICE	Orifice			TXV		
ORIFICE ID in./mm	.078 / 1.98			N/A		
OUTDOOR COIL Rows...Fins/in. Face Area (sq ft)	1...21 21.4	1...21 21.4	1...21 21.4	2...21 17.5	2...21 17.5	2...21 17.5
OUTDOOR FAN Nominal CFM Diameter in. Diameter (mm) Motor Hp (Rpm)	3500 26 660.4 1/5 (810)	3500 26 660.4 1/5 (810)	3500 26 660.4 1/5 (810)	3500 26 660.4 1/5 (810)	3500 26 660.4 1/5 (810)	3500 26 660.4 1/5 (810)
INDOOR COIL Rows...Fins/in. Face Area (sq ft)	3...17 5.6	3...17 5.6	3...17 5.6	3...17 5.6	3...17 5.6	3...17 5.6
INDOOR BLOWER Required Minimum Dissipation Airflow (CFM) Nominal Cooling Airflow (CFM) Size in. . (D x W) Size mm (D x W) Motor HP (RPM)	186 1600 11x10 279.4x254 1.0 (1075)	186 1600 11x10 279.4x254 1.0 (1075)	186 1600 11x10 279.4x254 1.0 (1075)	239 1750 11x10 279.4x254 1.0 (1040)	239 1750 11x10 279.4x254 1.0 (1040)	239 1750 11x10 279.4x254 1.0 (1040)
FURNACE SECTION* Burner Orifice No. (Qty...Drill Size) Natural Gas (Factory Installed) Propane Gas	3...38 3...53	3...33 3...51	3...31 3...49	3...31 3...49	3...31 3...49	3...31 3...49
HIGH-PRESSURE SWITCH (psig) Cut-out Reset (Auto)	650 +/- 15 420 +/- 25					
LOSS-OF CHARGE / LOW-PRESSURE SWITCH (Liquid Line) (psig) cut-out Reset (auto)	N/A					
RETURN-AIR FILTERS Throwaway† ‡in. mm	1 each 24x16x1, 24x18x1 610x406x25, 610x457x25					

*. Based on altitude of 0 to 2000 ft (0-610 m).

†. Required filter sizes shown are based on the larger of the AHRI (Air Conditioning Heating and Refrigeration Institute) rated cooling airflow or the heating airflow velocity of 300 to 350 ft/minute for throwaway type. Air filter pressure drop for non-standard filters must not exceed 0.08 IN. W.C.

‡. If using accessory filter rack refer to the filter rack installation instructions for correct filter sizes and quantity.

Accessories

Description	Accessory Model Number	Used With
Roof Curb, 14-in. High	CPRFCURB011B00	24-30
	CPRFCURB013B00	36-60
Adapter curb	CPADCURB001A00	24-30
	CPADCURB002A00	36-60
Gasket Kit for existing roof curb with new base rail unit	CPGSKTKIT001A00	All
Economizer - Vertical, gear driven w/Filter Rack and 1-in. filter	CPECOMZR007B00	24-30
	CPECOMZR008A00	42
	CPECOMZR009A00	36, 48, 60
Economizer - Horizontal w/Filter Rack and 1-in. filter	CPECOMZR010B00	24-30
	CPECOMZR011B00	42
	CPECOMZR012B00	36, 48, 60
Outdoor Enthalpy Control	AXB078ENT*	All
Manual Outside Air Damper (Includes filter rack and 1-in. filter, same as CPFILTRK kit)	CPMANDPR007A00	24-30
	CPMANDPR008A00	42
	CPMANDPR009A00	36, 48, 60
Internal Filter Rack (includes 1−in. filters)	CPFILTRK007A00	24-30
	CPFILTRK008A00	42
	CPFILTRK009A00	36, 48, 60
240V Crankcase Heater	CPCRKHTR008A00	24-36, 208/230-1
	CPCRKHTR004A00	30 208/230-1, 42-60 208/230-1
Low Ambient Control (Pressure Switch)	KSALA0301410	All
Five Minute Compressor Delay	NRTIMEGD001A00	All
PTC Compressor Start Assist Kit	CPHSTART002A00	All Single Phase
Outdoor Coil Louver Panels	CPLOUVER012A00	24
	CPLOUVER006A00	30
	CPLOUVER009A00	36-42
	CPLOUVER020A00	48
	CPLOUVER017A00	60
Natural to LP Conversion Kit (0 − 2000 ft)	NPLPCONV013C00†	All (except Ultra Low NOx)
Natural to LP Conversion Kit (2001 − 6000 ft)	NPLPCONV014C00†	All (except Ultra Low NOx)
LP to Natural Gas Conversion Kit (0 − 2000 ft)	NPNGCONV004C00†	All (except Ultra Low NOx)
Flue Discharge Deflector Assembly	CPFLUEDS001A00	All
Square to Round (1 set of 2, use with horizontal duct flanges only)	NPDUCFLG002A00	24-48
Low Pressure Switch	CPLPSCTL001A00	24-60

*. Outdoor enthalpy available as field installed accessory; Filter rack and 1-in. filter, same as CPFILTRK kit
†. Three phase models may use “A00”, “B00” or “C00” versions.

ECONOMIZER

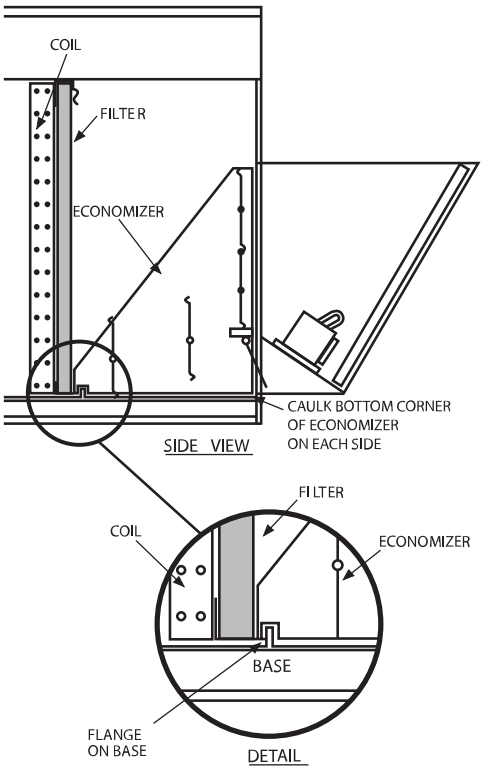

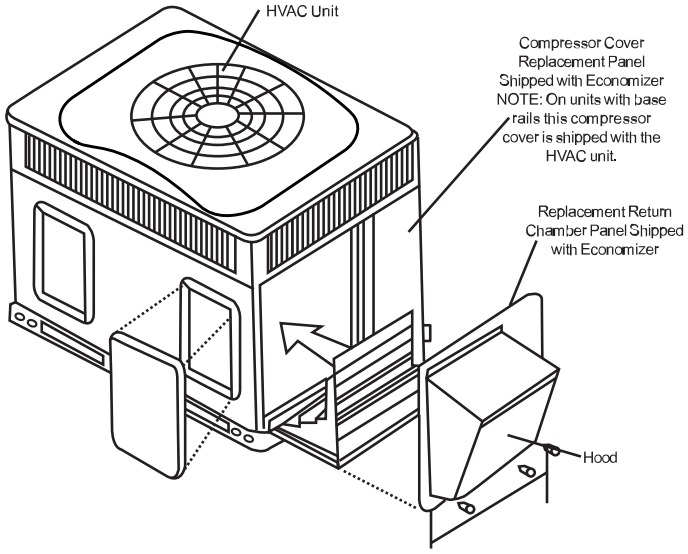

Vertical Economizer

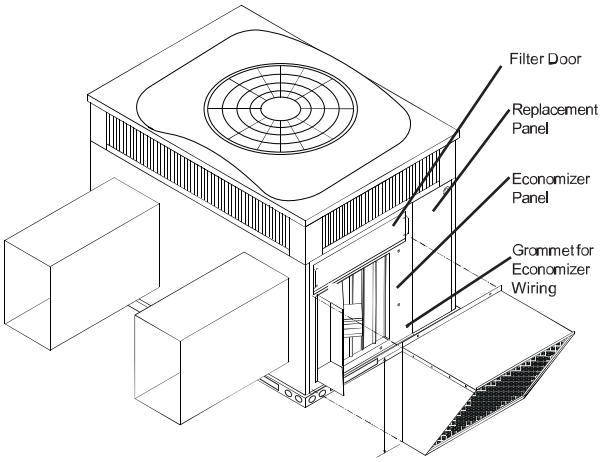

Horizontal Economizer

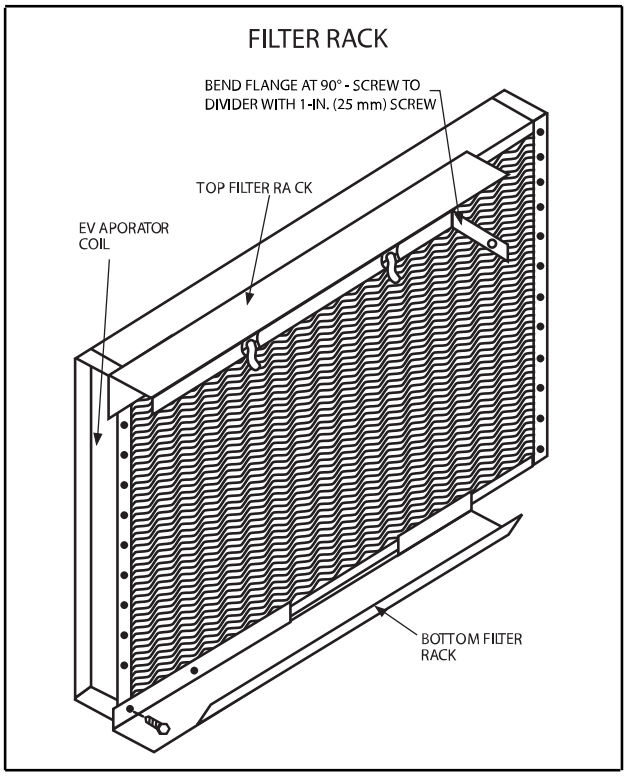

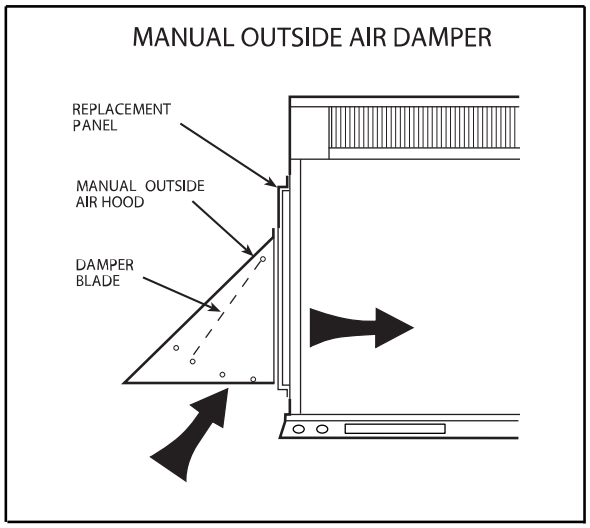

A09375

Unit Dimensions

24-30

COOLING CAPACITY	UNIT WT.		UNIT HEIGHT		CENTER OF GRAVITY					
	LB	KG	"A" in	"A" mm	"X" in	"X" mm	"Y" in	"Y" mm	"Z" in	"Z" mm
24	328.0	148.8	41.0	1041	22.8	579.4	15.3	388.9	15.7	398.5
30	337.0	152.9	43.0	1092	22.8	579.4	15.3	388.9	15.8	401.6

UNIT	CORNER WEIGHT							
	"1" LB	"1" KG	"2" LB	"2" KG	"3" LB	"3" KG	"4" LB	"4" KG
24	49.0	22.3	66.0	29.8	98.0	44.6	115.0	52.1
30	51.0	22.9	67.0	30.6	101.0	45.9	118.0	53.5

REQUIRED CLEARANCES TO COMBUSTIBLE MAT'L.

	INCHES [MM]
TOP OF UNIT	14 [355.6]
DUCT SIDE OF UNIT	2 [50.8]
SIDE OPPOSITE DUCTS	14 [355.6]
BOTTOM OF UNIT	1/2 [12.7]
FLUE PANEL	36 [914.4]

NEC. REQUIRED CLEARANCES.

	INCHES [MM]
BETWEEN UNITS, POWER ENTRY SIDE	42 [1066.8]
UNIT AND UNGROUNDED SURFACES, POWER ENTRY SIDE	36 [914.0]
UNIT AND BLOCK OR CONCRETE WALLS AND OTHER GROUNDED SURFACES, POWER ENTRY SIDE	42 [1066.8]

REQUIRED CLEARANCE FOR OPERATION AND SERVICING

	INCHES [MM]
EVAP. COIL ACCESS SIDE	36 [914.0]
POWER ENTRY SIDE (EXCEPT FOR NEC REQUIREMENTS)	42 [1066.8]
UNIT TOP	48 [1219.2]
SIDE OPPOSITE DUCTS	36 [914.0]
DUCT PANEL	12 [304.8]*

*MINIMUM DISTANCES:IF UNIT IS PLACED LESS THAN 12 [304.8] FROM WALL SYSTEM,THEN SYSTEM PERFORMANCE MAYBE COMPROMISED.

DIMENSIONS IN [] ARE IN MM

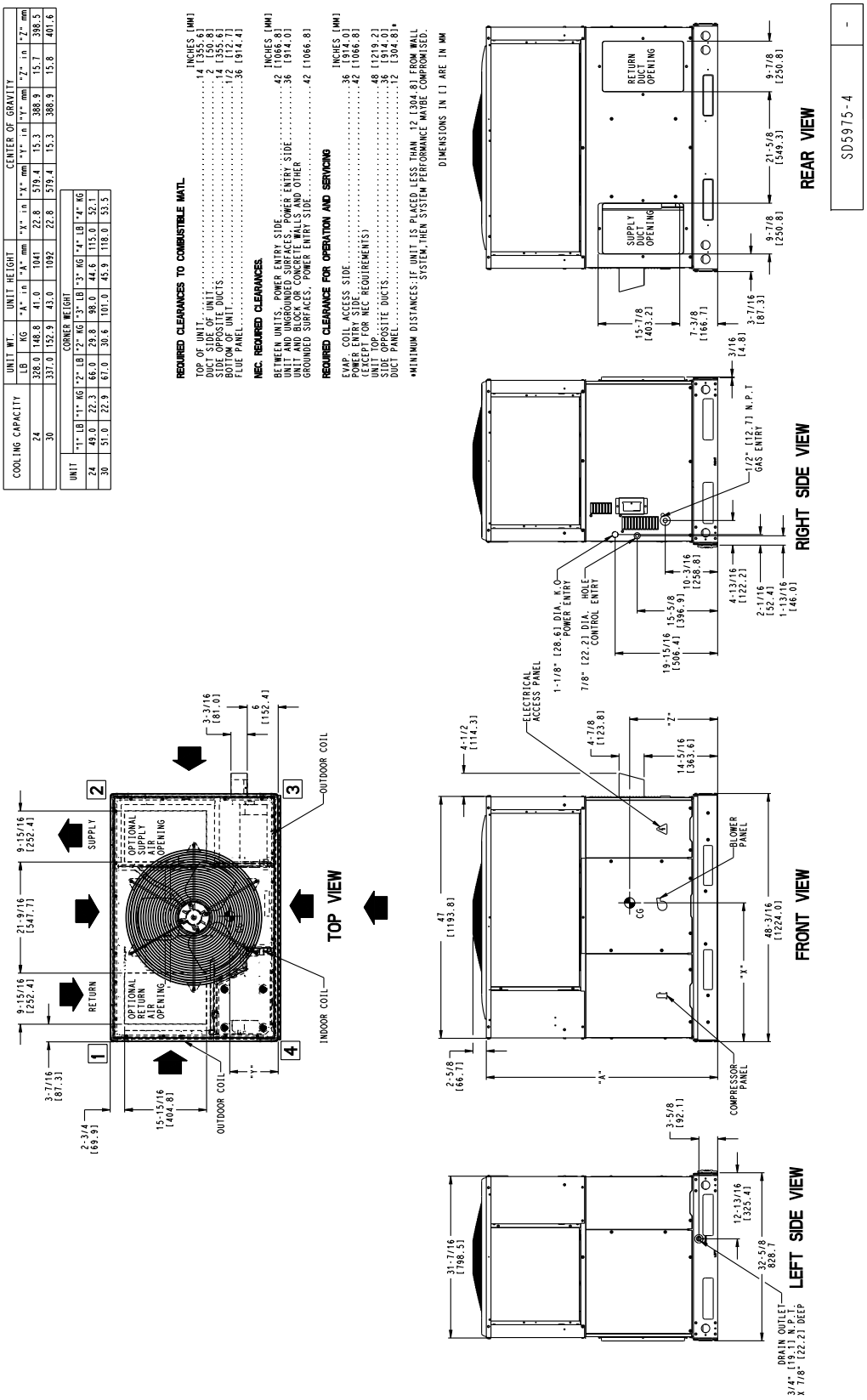

A230480

Unit Dimensions

36-60

COOLING CAPACITY	UNIT WT.		UNIT HEIGHT		CENTER OF GRAVITY					
	LB	KG	"A" in	"A" mm	"X" in	"X" mm	"Y" in	"Y" mm	"Z" in	"Z" mm
36	396.0	179.7	43.0	1092	22.8	579.4	18.0	451.2	17.1	435.0
42	424.0	192.4	43.0	1092	22.8	579.4	18.0	451.2	17.1	435.0
48	417.0	216.4	43.0	1295	22.8	579.4	18.0	451.2	17.6	447.7
60	482.0	218.7	43.0	1194	22.8	579.4	18.0	457.2	17.6	447.7

UNIT	CORNER WEIGHT							
	"1" LB	"1" KG	"2" LB	"2" KG	"3" LB	"3" KG	"4" LB	"4" KG
36	59.0	27.0	78.0	35.9	119.0	53.9	139.0	62.9
42	64.0	28.9	85.0	38.5	127.0	57.7	148.0	67.3
48	72.0	32.5	95.0	43.3	143.0	64.9	167.0	75.7
60	72.0	32.8	96.0	43.7	145.0	65.6	169.0	76.5

REQUIRED CLEARANCES TO COMBUSTIBLE MATL.

	INCHES [MM]
TOP OF UNIT	14 [355.6]
DUCT SIDE OF UNIT	2 [50.8]
SIDE OPPOSITE DUCTS	14 [355.6]
BOTTOM OF UNIT	1/2 [12.7]
FLUE PANEL	36 [914.4]

NEC. REQUIRED CLEARANCES.

	INCHES [MM]
BETWEEN UNITS, POWER ENTRY SIDE	42 [1066.8]
UNIT AND UNGROUNDED SURFACES, POWER ENTRY SIDE	36 [914.0]
UNIT AND BLOCK OR CONCRETE WALLS AND OTHER GROUNDED SURFACES, POWER ENTRY SIDE	42 [1066.8]

REQUIRED CLEARANCE FOR OPERATION AND SERVICING

	INCHES [MM]
EVAP. COIL ACCESS SIDE	36 [914.0]
POWER ENTRY SIDE	42 [1066.8]
(EXCEPT FOR NEC REQUIREMENTS)	
UNIT TOP	48 [1219.2]
SIDE OPPOSITE DUCTS	36 [914.0]
DUCT PANEL	12 [304.8]*

*MINIMUM DISTANCES:IF UNIT IS PLACED LESS THAN 12 [304.8] FROM WALL SYSTEM,THEN SYSTEM PERFORMANCE MAYBE COMPROMISED.

DIMENSIONS IN [] ARE IN MM

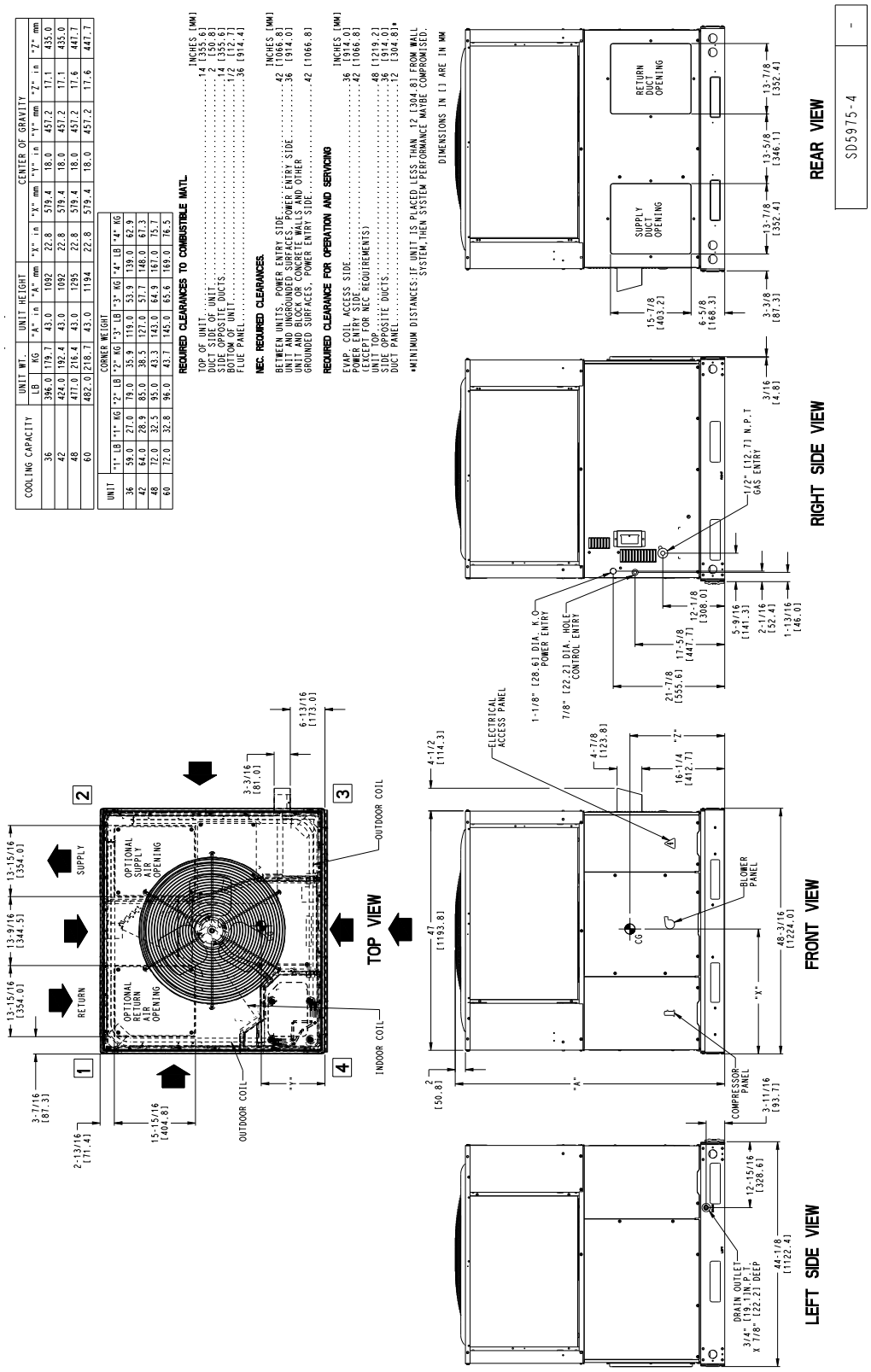

A230481

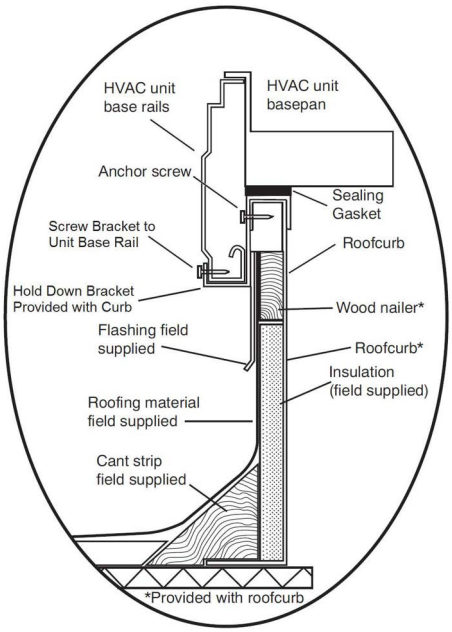

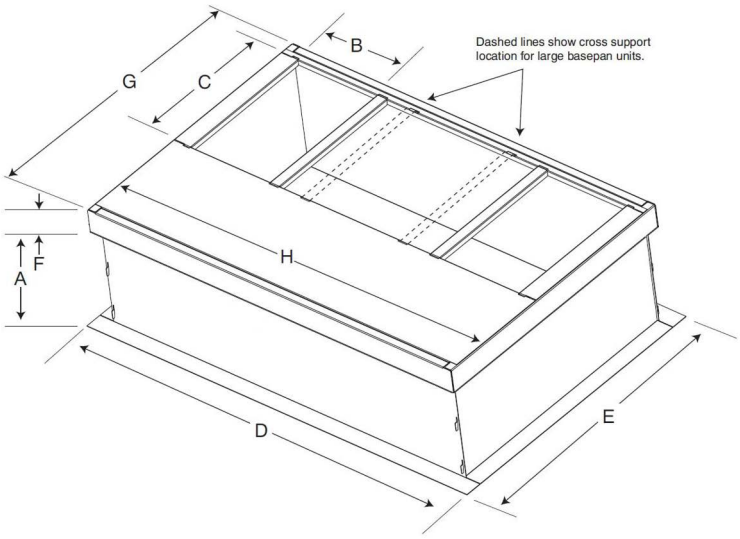

SMALL/COMMON CURB

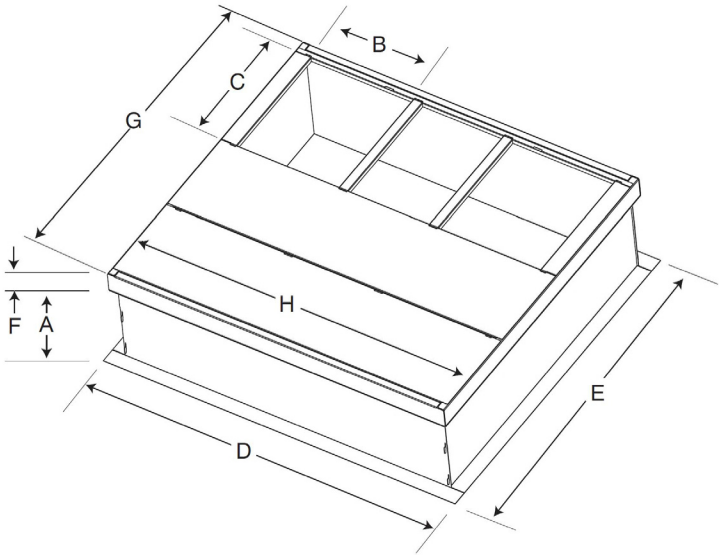

LARGE CURB

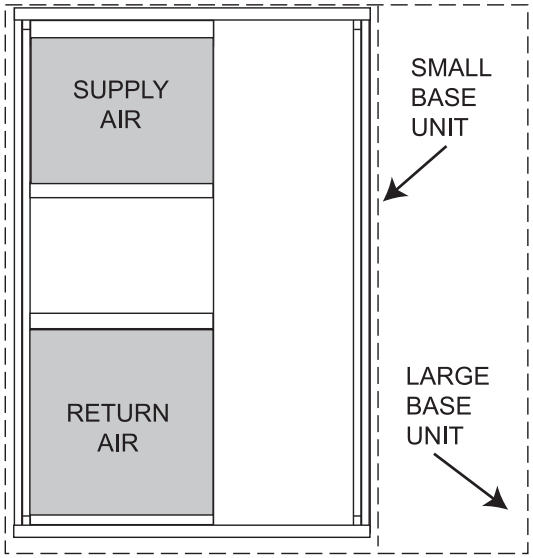

UNIT PLACEMENT ON COMMON CURB

SMALL OR LARGE BASE UNIT

A180216

Accessory Dimensions

UNIT SIZE	CATALOG NUMBER	A IN. (mm)	B (small / common base) IN. (mm)*	B (large base) IN. (mm)*	C IN. (mm)	D IN. (mm)	E IN. (mm)	F IN. (mm)	G IN. (mm)	H IN. (mm)
Small or Large	CPRFCURB011B00	14 (356)	10 (254)	14 (356)	16 (406)	47.8 (1214)	32.4 (822)	2.7 (69)	30.6 (778)	46.1 (1170)
Large	CPRFCURB013B00	14 (356)	14 (356)				43.9 (1116)		42.2 (1072)	

* Part Number CPRCURB011B00 can be used on both small and large basepan units. The cross supports must be located based on whether the unit is a small basepan or a large basepan.

NOTES:
Roof curb must be set up for unit being installed.
Seal strip must be applied, as required, to unit being installed.
Roof curb is made of 16-gauge steel.
Attach ductwork to curb (flanges of duct rest on curb).
Insulated panels: 1-in. (25.4 mm) thick fiberglass 1 lb. density.

Selection Procedure (With Example)

DETERMINE COOLING AND HEATING REQUIREMENTS AT DESIGN CONDITIONS:

Given:

Required Cooling Capacity (TC) ..... 46,000 Btuh
Sensible Heat Capacity (SHC) ..... 34,000 Btuh
Required Heating Capacity ..... 72,000 Btuh
Condenser Entering Air Temperature ..... 95°F (35°C)
Indoor-Air Temperature ..... 80°F (27°C) edb 67°F (19°C) ewb
Evaporator Air Quantity ..... 1600 CFM
External Static Pressure ..... 0.440 IN. W.C.
Electrical Characteristics 208-1-60

SELECT UNIT BASED ON REQUIRED COOLING CAPACITY

Enter Performance Data table at condenser entering temperature of 95°F (35°C). Unit 48 at 1600 CFM and 67°F (19°C) ewb (entering wet bulb) will provide a total capacity of 46,000 Btuh and a SHC of 34,700 Btuh. Calculate SHC correction, if required, using Note 4 under Cooling Capacities tables.

SELECT ELECTRIC HEAT

In the Gas Heating Capacities and Efficiencies table, note that the 48090 unit will provide 74,000 Btuh with an input of 90,000 Btuh.

DETERMINE FAN SPEED AND POWER REQUIREMENTS AT DESIGN CONDITIONS.

Before entering the air delivery tables, calculate the total static pressure required. From the given example, the Wet Coil Pressure Drop Table, and the Filter Pressure Drop Table:

External Static Pressure	0.300 IN. W.C
Filter	0.060 IN. W.C
Wet Coil Pressure Drop	0.070 IN. W.C
Total Static Pressure	0.43 IN. W.C

Enter the table for Dry Coil Air Delivery—At 0.43 IN. W.C. ESP (external static pressure) and MED speed the motor delivers between 1664 CFM and 1627 cfm. Interpolation estimates 1653 CFM at .43 IN. W.C. Thus, MED delivers CFM needed.

SELECT UNIT THAT CORRESPONDS TO POWER SOURCE AVAILABLE.

The Electrical Data Table shows that the unit is designed to operate at 208-1-60.

Manufacturer reserves the right to change, at any time, specifications and designs without notice and without obligations.

Performance Data

24 Size

EVAPORATOR AIR		CONDENSER ENTERING AIR TEMPEREATURES °F (°C)																	
		75 (23.9)			85 (29.4)			95 (35)			105 (40.6)			115 (46.1)			125 (51.7)		
CFM /	EWB	Capacity MBtuh		Total	Capacity MBtuh		Total	Capacity MBtuh		Total	Capacity MBtuh		Total	Capacity MBtuh		Total	Capacity MBtuh		Total
BF	°F(°C)	Total	Sens	Sys KW	Total	Sens	Sys KW	Total	Sens	Sys KW	Total	Sens	Sys KW	Total	Sens	Sys KW	Total	Sens	Sys KW
700 / .08	57 (13.8)	23.8	23.8	1.6	23.0	23.0	1.8	21.9	21.9	2.0	19.3	19.3	2.2	17.8	17.8	2.4	16.3	16.3	2.7
	62 (16.6)	24.8	22.2	1.6	23.7	21.7	1.8	22.6	20.5	2.0	19.9	18.9	2.2	18.3	17.5	2.4	16.7	16.0	2.7
	63*(17.2)	25.3	17.9	1.6	24.1	17.3	1.8	22.8	16.8	2.0	19.8	16.1	2.2	18.1	15.4	2.4	16.1	14.9	2.7
	67(19.4)	27.2	18.7	1.6	25.9	18.1	1.8	24.5	17.5	2.0	22.0	16.8	2.2	20.3	16.1	2.4	18.4	15.5	2.7
	72 (22.2)	29.6	14.9	1.7	28.3	14.3	1.8	26.7	13.7	2.0	23.3	13.1	2.2	21.3	12.4	2.5	19.1	11.8	2.8
750 / .08	57 (13.8)	23.4	22.6	1.6	22.6	21.3	1.8	21.6	20.0	2.0	19.0	18.4	2.2	17.5	17.0	2.5	16.0	15.6	2.7
	62 (16.6)	23.7	21.6	1.6	22.6	21.1	1.8	21.6	20.0	2.0	19.0	18.4	2.2	17.5	17.0	2.5	16.0	15.6	2.7
	63*(17.2)	23.9	17.5	1.6	22.9	16.9	1.8	21.6	16.3	2.0	18.8	15.7	2.2	17.1	15.0	2.5	15.3	14.5	2.7
	67(19.4)	25.8	18.2	1.7	24.6	17.6	1.8	23.2	17.0	2.0	20.9	16.3	2.2	19.3	15.6	2.5	17.4	15.1	2.7
	72 (22.2)	28.1	14.6	1.7	26.8	13.9	1.8	25.4	13.4	2.0	22.1	12.7	2.3	20.2	12.0	2.5	18.1	11.5	2.8
900 / .09	57 (13.8)	25.9	25.7	1.7	25.0	24.3	1.8	23.8	22.8	2.0	21.0	21.0	2.3	19.3	19.3	2.5	17.7	17.7	2.8
	62 (16.6)	26.2	24.9	1.7	25.0	24.1	1.8	23.8	22.8	2.0	21.0	21.0	2.3	19.3	19.3	2.5	17.7	17.7	2.8
	63*(17.2)	26.4	19.9	1.7	25.2	19.3	1.8	23.8	18.6	2.0	20.7	17.9	2.3	18.9	17.1	2.5	16.9	16.6	2.8
	67(19.4)	28.4	20.7	1.7	27.1	20.1	1.9	25.6	19.4	2.1	23.1	18.6	2.3	21.3	17.8	2.5	19.2	17.2	2.8
	72 (22.2)	31.0	16.6	1.7	29.6	15.8	1.9	28.0	15.3	2.1	24.4	14.5	2.3	22.3	13.7	2.5	20.0	13.1	2.8

See Notes on page 16.

Performance Data

30 Size

EVAPORATOR AIR		CONDENSER ENTERING AIR TEMPEREATURES °F (°C)																	
		75 (23.9)			85 (29.4)			95 (35)			105 (40.6)			115 (46.1)			125 (51.7)		
CFM /	EWB	Capacity MBtuh		Total	Capacity MBtuh		Total	Capacity MBtuh		Total	Capacity MBtuh		Total	Capacity MBtuh		Total	Capacity MBtuh		Total
BF	°F(°C)	Total	Sens	Sys KW	Total	Sens	Sys KW	Total	Sens	Sys KW	Total	Sens	Sys KW	Total	Sens	Sys KW	Total	Sens	Sys KW
875 / .09	57 (13.8)	29.2	29.2	2.0	28.2	28.2	2.2	26.9	26.9	2.4	22.9	22.9	2.7	21.3	21.3	2.9	19.5	19.5	3.1
	62 (16.6)	30.3	27.6	2.0	29.0	27.0	2.2	27.6	25.5	2.4	23.5	22.7	2.7	21.9	21.5	2.9	20.0	19.5	3.1
	63*(17.2)	30.9	22.3	2.0	29.5	21.6	2.2	27.9	20.8	2.4	23.5	19.6	2.7	21.6	19.2	2.9	19.3	18.1	3.1
	67(19.4)	33.3	23.2	2.0	31.8	22.5	2.2	30.0	21.7	2.5	26.4	20.6	2.7	24.6	20.0	2.9	22.2	19.1	3.1
	72 (22.2)	36.3	18.6	2.0	34.6	17.7	2.2	32.8	17.1	2.5	27.7	15.9	2.7	25.6	15.4	2.9	22.8	14.3	3.1
950 / .10	57 (13.8)	29.1	28.4	2.0	28.1	26.8	2.2	26.8	25.2	2.5	22.8	22.4	2.7	21.3	21.3	2.9	19.4	19.2	3.1
	62 (16.6)	29.4	27.3	2.0	28.1	26.6	2.2	26.8	25.2	2.5	22.8	22.4	2.7	21.3	21.3	2.9	19.4	19.2	3.1
	63*(17.2)	29.7	22.0	2.0	28.4	21.3	2.2	26.8	20.6	2.5	22.6	19.3	2.7	20.8	18.9	2.9	18.5	17.9	3.1
	67(19.4)	32.0	22.9	2.0	30.5	22.2	2.2	28.8	21.4	2.5	25.3	20.3	2.7	23.6	19.7	2.9	21.3	18.8	3.1
	72 (22.2)	34.8	18.3	2.1	33.3	17.5	2.3	31.5	16.9	2.5	26.6	15.7	2.7	24.6	15.2	2.9	22.0	14.1	3.2
1125 / .11	57 (13.8)	31.7	31.7	2.1	30.6	30.2	2.3	29.1	28.3	2.5	24.9	24.9	2.8	23.2	23.2	3.0	21.1	21.1	3.2
	62 (16.6)	32.0	31.0	2.1	30.6	29.9	2.3	29.2	28.3	2.5	24.9	24.9	2.8	23.2	23.2	3.0	21.1	21.1	3.2
	63*(17.2)	32.4	24.8	2.1	30.9	23.9	2.3	29.2	23.1	2.5	24.6	21.7	2.8	22.6	21.3	3.0	20.2	20.1	3.2
	67(19.4)	34.8	25.8	2.1	33.3	24.9	2.3	31.4	24.1	2.6	27.6	22.9	2.8	25.7	22.2	3.0	23.2	21.2	3.2
	72 (22.2)	38.0	20.6	2.1	36.3	19.7	2.3	34.3	19.0	2.6	29.0	17.6	2.8	26.8	17.1	3.0	23.9	15.9	3.2

See Notes on page 16.

Manufacturer reserves the right to change, at any time, specifications and designs without notice and without obligations.

Performance Data

36 Size

EVAPORATOR AIR		CONDENSER ENTERING AIR TEMPEREATURES °F (°C)																	
		75 (23.9)			85 (29.4)			95 (35)			105 (40.6)			115 (46.1)			125 (51.7)		
CFM / BF	EWB °F(°C)	Capacity MBtuh Total	Capacity MBtuh Sens	Total Sys KW	Capacity MBtuh Total	Capacity MBtuh Sens	Total Sys KW	Capacity MBtuh Total	Capacity MBtuh Sens	Total Sys KW	Capacity MBtuh Total	Capacity MBtuh Sens	Total Sys KW	Capacity MBtuh Total	Capacity MBtuh Sens	Total Sys KW	Capacity MBtuh Total	Capacity MBtuh Sens	Total Sys KW
1050 / .10	57 (13.8)	34.6	34.6	2.4	33.4	33.4	2.7	31.8	31.8	3.0	27.4	27.4	3.3	25.3	25.3	3.5	23.1	23.1	3.8
	62 (16.6)	35.9	33.0	2.4	34.3	32.2	2.7	32.7	30.5	3.0	28.2	27.1	3.3	26.0	25.5	3.5	23.7	23.3	3.8
	63*(17.2)	36.6	26.6	2.4	35.0	25.8	2.7	33.0	24.9	3.0	28.1	23.4	3.3	25.6	22.9	3.5	22.8	21.7	3.8
	67(19.4)	39.4	27.8	2.5	37.6	26.9	2.7	35.5	25.9	3.0	31.6	24.6	3.3	29.1	23.9	3.5	26.3	22.8	3.8
	72 (22.2)	42.9	22.2	2.5	41.0	21.2	2.7	38.8	20.4	3.0	33.2	19.0	3.3	30.3	18.4	3.6	27.1	17.1	3.8
1150 / .11	57 (13.8)	34.7	34.3	2.5	33.5	32.3	2.7	32.0	30.4	3.0	27.6	27.0	3.3	25.4	25.4	3.6	23.2	23.2	3.8
	62 (16.6)	35.1	32.9	2.5	33.5	32.1	2.7	32.0	30.4	3.0	27.6	27.0	3.3	25.4	25.4	3.6	23.2	23.2	3.8
	63*(17.2)	35.5	26.5	2.5	33.9	25.7	2.7	32.0	24.8	3.0	27.2	23.3	3.3	24.8	22.8	3.6	22.1	21.6	3.8
	67(19.4)	38.2	27.6	2.5	36.5	26.7	2.7	34.4	25.8	3.0	30.6	24.5	3.3	28.2	23.8	3.6	25.5	22.7	3.8
	72 (22.2)	41.6	22.1	2.5	39.7	21.1	2.8	37.6	20.3	3.1	32.1	18.9	3.3	29.3	18.3	3.6	26.2	17.0	3.9
1350 / .12	57 (13.8)	37.5	37.5	2.5	36.2	36.1	2.8	34.5	33.8	3.1	29.8	29.8	3.4	27.4	27.4	3.6	25.0	25.0	3.9
	62 (16.6)	37.9	37.1	2.5	36.2	35.8	2.8	34.6	33.8	3.1	29.8	29.8	3.4	27.4	27.4	3.6	25.0	25.0	3.9
	63*(17.2)	38.4	29.6	2.5	36.6	28.6	2.8	34.6	27.7	3.1	29.4	26.0	3.4	26.8	25.4	3.6	23.9	23.9	3.9
	67(19.4)	41.2	30.8	2.6	39.4	29.8	2.8	37.2	28.8	3.1	33.1	27.4	3.4	30.5	26.5	3.6	27.5	25.3	3.9
	72 (22.2)	45.0	24.7	2.6	42.9	23.6	2.8	40.6	22.7	3.1	34.7	21.1	3.4	31.7	20.4	3.7	28.3	19.0	3.9

See Notes on page 16.

Performance Data

42 Size

EVAPORATOR AIR		CONDENSER ENTERING AIR TEMPEREATURES °F (°C)																	
		75 (23.9)			85 (29.4)			95 (35)			105 (40.6)			115 (46.1)			125 (51.7)		
CFM / BF	EWB °F(°C)	Capacity MBtuh Total	Capacity MBtuh Sens	Total Sys KW	Capacity MBtuh Total	Capacity MBtuh Sens	Total Sys KW	Capacity MBtuh Total	Capacity MBtuh Sens	Total Sys KW	Capacity MBtuh Total	Capacity MBtuh Sens	Total Sys KW	Capacity MBtuh Total	Capacity MBtuh Sens	Total Sys KW	Capacity MBtuh Total	Capacity MBtuh Sens	Total Sys KW
1225 / .09	57 (13.8)	40.0	40.0	2.8	38.6	38.6	3.0	36.8	36.8	3.4	31.7	31.7	3.7	29.2	29.2	4.0	26.6	26.6	4.3
	62 (16.6)	41.5	38.8	2.8	39.6	37.8	3.0	37.8	35.8	3.4	32.6	31.8	3.7	30.0	29.5	4.0	27.4	26.9	4.3
	63*(17.2)	42.3	31.3	2.8	40.4	30.2	3.0	38.2	29.2	3.4	32.5	27.5	3.7	29.6	26.9	4.0	26.4	25.5	4.3
	67(19.4)	45.5	32.6	2.8	43.5	31.5	3.1	41.0	30.4	3.4	36.5	28.9	3.7	33.6	28.0	4.0	30.4	26.8	4.3
	72 (22.2)	49.6	26.1	2.8	47.4	24.9	3.1	44.8	24.0	3.4	38.3	22.3	3.7	35.0	21.6	4.0	31.3	20.1	4.3
1350 / .10	57 (13.8)	40.4	40.4	2.8	39.0	38.2	3.1	37.2	35.8	3.4	32.0	31.9	3.7	29.5	29.5	4.0	26.9	26.9	4.3
	62 (16.6)	40.8	38.8	2.8	39.0	37.9	3.1	37.2	35.8	3.4	32.0	31.9	3.7	29.5	29.5	4.0	26.9	26.9	4.3
	63*(17.2)	41.3	31.3	2.8	39.4	30.3	3.1	37.2	29.3	3.4	31.7	27.5	3.7	28.9	26.9	4.0	25.8	25.5	4.3
	67(19.4)	44.4	32.6	2.8	42.4	31.6	3.1	40.0	30.5	3.5	35.6	29.0	3.7	32.8	28.1	4.0	29.6	26.8	4.3
	72 (22.2)	48.4	26.1	2.9	46.2	24.9	3.1	43.7	24.0	3.5	37.4	22.3	3.8	34.1	21.6	4.0	30.5	20.1	4.4
1575 /.11	57 (13.8)	43.4	43.4	2.9	41.9	41.9	3.1	39.9	39.7	3.5	34.4	34.4	3.8	31.7	31.7	4.1	28.9	28.9	4.4
	62 (16.6)	43.8	43.5	2.9	41.9	41.9	3.1	39.9	39.7	3.5	34.4	34.4	3.8	31.7	31.7	4.1	28.9	28.9	4.4
	63*(17.2)	44.3	34.7	2.9	42.3	33.6	3.1	40.0	32.5	3.5	34.0	30.5	3.8	31.0	29.9	4.1	27.6	27.6	4.4
	67(19.4)	47.7	36.2	2.9	45.5	35.0	3.2	42.9	33.8	3.5	38.2	32.1	3.8	35.2	31.1	4.1	31.8	29.7	4.4
	72 (22.2)	51.9	28.9	2.9	49.6	27.6	3.2	46.9	26.6	3.6	40.1	24.7	3.8	36.6	23.9	4.1	32.7	22.3	4.4

See Notes on page 16.

Manufacturer reserves the right to change, at any time, specifications and designs without notice and without obligations.

Performance Data

48 Size

EVAPORATOR AIR		CONDENSER ENTERING AIR TEMPEREATURES °F (°C)																	
		75 (23.9)			85 (29.4)			95 (35)			105 (40.6)			115 (46.1)			125 (51.7)		
CFM	EWB	Capacity MBtuh		Total	Capacity MBtuh		Total	Capacity MBtuh		Total	Capacity MBtuh		Total	Capacity MBtuh		Total	Capacity MBtuh		Total
/BF	°F(°C)	Total	Sens	Sys KW	Total	Sens	Sys KW	Total	Sens	Sys KW	Total	Sens	Sys KW	Total	Sens	Sys KW	Total	Sens	Sys KW
1400 / .09	57 (13.8)	44.3	44.3	3.2	42.8	42.8	3.5	40.8	40.8	3.9	35.1	35.1	4.3	32.4	32.4	4.6	29.5	29.5	5.0
	62 (16.6)	46.0	42.6	3.2	44.0	41.5	3.5	41.9	39.3	3.9	36.1	34.9	4.3	33.3	32.7	4.6	30.4	29.8	5.0
	63*(17.2)	47.0	34.3	3.2	44.8	33.2	3.5	42.3	32.1	3.9	36.0	30.2	4.3	32.8	29.5	4.6	29.3	27.9	5.0
	67(19.4)	50.5	35.8	3.3	48.2	34.6	3.6	45.5	33.4	4.0	40.5	31.7	4.3	37.3	30.7	4.6	33.7	29.4	5.0
	72 (22.2)	55.0	28.6	3.3	52.6	27.3	3.6	49.7	26.3	4.0	42.5	24.4	4.4	38.8	23.7	4.7	34.7	22.1	5.0
1600 / .10	57 (13.8)	46.5	46.1	3.3	44.9	43.5	3.6	42.7	40.8	4.0	36.8	36.3	4.4	33.9	33.9	4.7	31.0	31.0	5.1
	62 (16.6)	47.0	44.2	3.3	44.9	43.1	3.6	42.8	40.8	4.0	36.8	36.3	4.4	33.9	33.9	4.7	31.0	31.0	5.1
	63*(17.2)	47.5	35.7	3.3	45.3	34.5	3.6	42.8	33.3	4.0	36.4	31.3	4.4	33.2	30.7	4.7	29.6	29.0	5.1
	67(19.4)	51.1	37.2	3.3	48.8	35.9	3.6	46.0	34.7	4.1	40.9	33.0	4.4	37.7	31.9	4.7	34.0	30.6	5.1
	72 (22.2)	55.7	29.7	3.4	53.1	28.4	3.7	50.3	27.3	4.1	43.0	25.4	4.4	39.2	24.6	4.7	35.1	22.9	5.1
1800 / .11	57 (13.8)	48.1	48.1	3.4	46.4	46.4	3.7	44.2	43.6	4.1	38.1	38.1	4.4	35.1	35.1	4.8	32.1	32.1	5.1
	62 (16.6)	48.6	47.7	3.4	46.4	46.1	3.7	44.3	43.6	4.1	38.1	38.1	4.4	35.1	35.1	4.8	32.1	32.1	5.1
	63*(17.2)	49.1	38.1	3.4	46.9	36.9	3.7	44.3	35.6	4.1	37.7	33.5	4.4	34.4	32.8	4.8	30.7	30.7	5.1
	67(19.4)	52.8	39.7	3.4	50.5	38.4	3.7	47.6	37.1	4.1	42.4	35.3	4.4	39.0	34.1	4.8	35.2	32.7	5.1
	72 (22.2)	57.6	31.8	3.4	55.0	30.3	3.7	52.0	29.2	4.2	44.5	27.1	4.5	40.6	26.3	4.8	36.3	24.5	5.2

See Notes on page 16.

Performance Data

60 Size

EVAPORATOR AIR		CONDENSER ENTERING AIR TEMPEREATURES °F (°C)																	
		75 (23.9)			85 (29.4)			95 (35)			105 (40.6)			115 (46.1)			125 (51.7)		
CFM	EWB	Capacity MBtuh		Total	Capacity MBtuh		Total	Capacity MBtuh		Total	Capacity MBtuh		Total	Capacity MBtuh		Total	Capacity MBtuh		Total
/BF	°F(°C)	Total	Sens	Sys KW	Total	Sens	Sys KW	Total	Sens	Sys KW	Total	Sens	Sys KW	Total	Sens	Sys KW	Total	Sens	Sys KW
1600 / .10	57 (13.8)	56.4	56.4	4.0	54.4	54.4	4.4	51.8	51.8	4.9	42.7	42.7	5.3	39.2	39.2	5.7	36.6	36.6	6.2
	62 (16.6)	58.6	52.1	4.0	55.9	50.8	4.4	53.3	48.1	4.9	43.9	40.1	5.3	40.3	39.5	5.7	37.6	35.9	6.2
	63*(17.2)	59.7	42.0	4.0	57.0	40.7	4.4	53.9	39.3	4.9	43.8	34.6	5.3	39.7	35.3	5.7	36.2	33.4	6.2
	67(19.4)	64.2	43.8	4.0	61.3	42.3	4.4	57.9	40.9	4.9	49.2	36.4	5.3	45.1	36.8	5.7	41.7	35.2	6.2
	72 (22.2)	70.0	35.0	4.1	66.8	33.5	4.5	63.2	32.2	5.0	51.6	28.0	5.4	46.9	28.4	5.8	42.9	26.4	6.2
1750 / .10	57 (13.8)	56.6	54.0	4.0	54.6	50.9	4.4	52.0	47.8	4.9	42.8	39.8	5.4	39.3	39.3	5.8	36.7	35.7	6.2
	62 (16.6)	57.2	51.8	4.0	54.6	50.5	4.4	52.1	47.8	4.9	42.8	39.8	5.4	39.3	39.3	5.8	36.7	35.7	6.2
	63*(17.2)	57.8	41.8	4.0	55.2	40.4	4.4	52.1	39.1	4.9	42.4	34.4	5.4	38.4	35.1	5.8	35.1	33.2	6.2
	67(19.4)	62.2	43.5	4.1	59.4	42.1	4.5	56.0	40.7	5.0	47.6	36.2	5.4	43.7	36.6	5.8	40.3	35.0	6.2
	72 (22.2)	67.8	34.8	4.1	64.7	33.3	4.5	61.2	32.0	5.0	50.0	27.9	5.4	45.4	28.2	5.8	41.5	26.2	6.3
2000 / .13	57 (13.8)	59.5	58.6	4.1	57.4	55.3	4.5	54.7	51.9	5.0	45.0	43.2	5.5	41.3	41.3	5.9	38.6	38.6	6.3
	62 (16.6)	60.1	56.8	4.1	57.4	54.9	4.5	54.8	51.9	5.0	45.0	43.2	5.5	41.3	41.3	5.9	38.6	38.6	6.3
	63*(17.2)	60.8	45.4	4.1	58.0	43.9	4.5	54.8	42.4	5.0	44.5	37.3	5.5	40.4	38.2	5.9	36.9	36.1	6.3
	67(19.4)	65.4	47.3	4.2	62.4	45.7	4.6	58.9	44.2	5.1	50.0	39.3	5.5	45.9	39.8	5.9	42.4	38.0	6.3
	72 (22.2)	71.2	37.8	4.2	68.0	36.1	4.6	64.4	34.8	5.1	52.6	30.3	5.5	47.8	30.6	5.9	43.7	28.5	6.4

See Notes on page 16.

Manufacturer reserves the right to change, at any time, specifications and designs without notice and without obligations.

Performance Data

*At 75°F (24°C) entering dry bulb-Tennessee Valley Authority (TVA) rating conditions; all others at 80°F (26.7°C) dry bulb.
LEGEND
BF— Bypass Factor
edb— Entering Dry-Bulb
ewb— Entering Wet-Bulb
KW — Total Unit Power Input
rh—Relative Humidity

COOLING NOTES:
1. Ratings are net; they account for the effects of the evaporator-fan motor power and heat.
2. Direct interpolation is permissible. Do not extrapolate.
3. The following formulas may be used:

$$t_{ldb} = t_{edb} - \frac{\text{Sensible Capacity (Btuh)}}{1.09 \times \text{CFM}}$$

t_{lwb} = Wet-bulb temperature corresponding to enthalpy air leaving evaporator coil (h_{lwb})

$$h_{lwb} = h_{ewb} - \frac{\text{Total Capacity (Btuh)}}{(4.5 \times \text{CFM})}$$

Where: h_{ewb} = Enthalpy of air entering evaporator coil

4. The Sensible Capacity is based on 80° F (26.7°C) edb temperature of air entering evaporator coil. Below 80°F (26.7°C) edb, subtract (corr factor x cfm) from Sensible Capacity. Above 80°F (26.7°C) edb, add (corr factor x cfm) to Sensible Capacity.
Correction Factor = 1.09 x (1 - BF) x (t_{edb} - 80)

Manufacturer reserves the right to change, at any time, specifications and designs without notice and without obligations.

Gas Adjustment

Natural Gas Orifice Sizes and Manifold Pressure

Nameplate Input (Btu/hr)		ALTITUDE OF INSTALLATION (FT. ABOVE SEA LEVEL) U.S.A.*				
		0 to 2000 (0-610 m)	2001 to 3000* (611 to 914 m)	3001 to 4000 (915 to 1219 m)	4001 to 5000 (1220 to 1524 m)	5001 to 6000 (1524 to 1829 m)
40000	Orifice No. (Qty)	44 (2)	45 (2)†	48(2)†	48 (2)†	48 (2)†
	Manifold Press. (in. W.C.)	3.2	3.2	3.8	3.5	3.2
60000	Orifice No. (Qty)	44 (2)	45 (2)†	48 (2)†	48 (2)†	48 (2)†
	Manifold Press. (in. W.C.)	3.2	3.2	3.8	3.5	3.2
90000	Orifice No. (Qty)	38 (3)	41 (3)†	41 (3)†	42 (3)†	42 (3)†
	Manifold Press. (in. W.C.)	3.6	3.8	3.4	3.4	3.2
115000	Orifice No. (Qty)	33 (3)	36 (3)†	36 (3)†	36 (3)†	38 (3)†
	Manifold Press. (in. W.C.)	3.8	3.8	3.6	3.3	3.6
127000	Orifice No. (Qty)	31 (3)	31 (3)	33 (3)†	33 (3)†	34 (3)†
	Manifold Press. (in. W.C.)	3.7	3.2	3.5	3.2	3.2

*. In the U.S.A., the input rating for altitudes above 2000 ft (610m) must be reduced by 4% for each 1000 ft (305 m) above sea level.
In Canada, the input rating for altitudes from 2001 to 4500 ft (611 to 1372 m) above sea level must be derated by 10% by an authorized gas conversion station or dealer.
For Canadian Installations from 2000 to 4500 ft (610-1372 m), use U.S.A. column 2001 to 3000 ft (611 to 914 m).
†. Orifices available through your distributor.
NOTE: Orifice sizes and manifold pressure settings are based on natural gas with a heating value of 1025 Btu/ft^3 and a specific gravity of .6.

Propane Gas Orifice Sizes and Manifold Pressure

Nameplate Input (Btu/hr)		ALTITUDE OF INSTALLATION (FT. ABOVE SEA LEVEL) U.S.A.*†				
		0 to 2000 (0-610 m)	2001 to 3000* (611 to 914 m)	3001 to 4000 (915 to 1219 m)	4001 to 5000 (1220 to 1524 m)	5001 to 6000 (1524 to 1829 m)
40000	Orifice No. (Qty)	55 (2)	56 (2)	56 (2)	56 (2)	56 (2)
	Manifold Press. (in. W.C.)	10.0	11.0	11.0	11.0	10.7
60000	Orifice No. (Qty)	55 (3)	56 (3)	56 (3)	56 (3)	54 (3)
	Manifold Press. (in. W.C.)	10.0	11.0	11.0	11.0	11.7
90000	Orifice No. (Qty)	53 (3)	54 (3)	54 (3)	54 (3)	54 (3)
	Manifold Press.(in. W.C.)	10.0	11.0	11.0	11.0	11.0
115000	Orifice No. (Qty)	51 (3)	52 (3)	52 (3)	53 (3)	53 (3)
	Manifold Press. (in. W.C.)	10.0	11.0	10.6	11.0	11.0
127000	Orifice No. (Qty)	49 (3)	50 (3)	51 (3)	52 (3)	52 (3)
	Manifold Press. (in. W.C.)	10.0	11.0	11.0	11.0	11.0

*. In the U.S.A., the input rating for altitudes above 2000 ft (610m) must be reduced by 4% for each 1000 ft (305 m) above sea level.
In Canada, the input rating for altitudes from 2001 to 4500 ft (611 to 1372 m) above sea level must be derated by 10% by an authorized gas conversion station or dealer.
For Canadian Installations from 2000 to 4500 ft (610-1372 m), use U.S.A. column 2001 to 3000 ft (611 to 914 m).
†. Use Kit No. CPLPCONV013*00 (0-2000 ft [0-610 m] above sea level). Use Kit No. CPLPCONV014*00 (2001-6000 ft [611-1829 m] above sea level).

Manufacturer reserves the right to change, at any time, specifications and designs without notice and without obligations.

High Altitude Compensation, Propane Gas

Nameplate Input (Btu/hr)	Rated Heating Input (Btu/hr), LP Gas at Installation Altitude Above Sea Level, U.S.A.*				
	0 to 2000 ft (0-610 m)	2001 to 3000 ft* (611 to 914 m)	3001 to 4000 ft (915 to 1219 m)	4001 to 5000 ft (1220 to 1524 m)	5001 to 6000 ft (1524 to 1829 m)
40000	38000	31700	31700	31700	31200
60000	57000	47500	47500	47500	46900
90000	79000	68900	68900	68600	68600
115000	103000	100400	98900	83000	83000
127000	116000	115500	111800	101300	100400

*. In the U.S.A., the input rating for altitudes above 2000 ft (610m) must be reduced by 4% for each 1000 ft (305 m) above sea level.
In Canada, the input rating for altitudes from 2001 to 4500 ft (611 to 1372 m) above sea level must be derated by 10% by an authorized gas conversion station or dealer.
For Canadian Installations from 2000 to 4500 ft (610-1372 m), use U.S.A. column 2001 to 3000 ft (611 to 914 m).

High Altitude Compensation, Natural Gas

Nameplate Input (Btu/hr)	Rated Heating Input (Btu/hr), Natural Gas at Installation Altitude Above Sea Level, U.S.A.**				
	0 to 2000 ft (0-610 m)	2001 to 3000 ft* (611 to 914 m)	3001 to 4000 ft (915 to 1219 m)	4001 to 5000 ft (1220 to 1524 m)	5001 to 6000 ft (1524 to 1829 m)
40000	40000	36000	34400	32800	31200
60000	60000	54000	51600	49200	46800
90000	90000	81000	77400	73800	70200
115000	115000	103500	98900	94300	89700
127000	127000	114300	109200	104100	99100

*. In the U.S.A., the input rating for altitudes above 2000 ft (610m) must be reduced by 4% for each 1000 ft (305 m) above sea level.
In Canada, the input rating for altitudes from 2001 to 4500 ft (611 to 1372 m) above sea level must be derated by 10% by an authorized gas conversion station or dealer.
For Canadian Installations from 2000 to 4500 ft (610-1372 m), use U.S.A. column 2001 to 3000 ft (611 to 914 m).

Manufacturer reserves the right to change, at any time, specifications and designs without notice and without obligations.

Dry Coil Air Delivery* - Horizontal and Downflow Discharge Sizes 24-60

Unit Size	Heating Rise °F (°C)	Motor Speed	Tap	Allowable Functions	ESP (in. W.C.)	0.1	0.2	0.3	0.4	0.5	0.6	0.7	0.8	0.9	1
24040	25 - 55 (14 - 31)	Low†	Blue	Alternate Heating	CFM	640	553	454	310	---	---	---	---	---	---
					BHP	0.07	0.08	0.08	0.09	---	---	---	---	---	---
					Gas Heat Rise (°F)	47	54	NA	NA	NA	NA	NA	NA	NA	NA
					Gas Heat Rise (°C)	26	30	NA	NA	NA	NA	NA	NA	NA	NA
		Med-Low	Pink	Heating Alternate Cooling	CFM	830	758	688	607	514	393	254	---	---	---
					BHP	0.12	0.13	0.13	0.13	0.14	0.14	0.15	---	---	---
					Gas Heat Rise (°F)	36	39	43	49	NA	NA	NA	NA	NA	NA
					Gas Heat Rise (°C)	20	22	24	27	NA	NA	NA	NA	NA	NA
		Medium**	Red	Cooling Alternate Heating	CFM	1080	1025	969	910	852	787	718	638	541	457
					BHP	0.21	0.22	0.23	0.23	0.24	0.24	0.25	0.25	0.26	0.27
					Gas Heat Rise (°F)	28	29	31	33	35	38	41	47	55	NA
					Gas Heat Rise (°C)	15	16	17	18	19	21	23	26	31	NA
		Med-High‡	Orange	Alternate Cooling Alternate Heating	CFM	1101	1046	993	936	878	816	749	676	599	498
					BHP	0.22	0.23	0.24	0.24	0.25	0.26	0.26	0.27	0.27	0.28
					Gas Heat Rise (°F)	27	28	30	32	34	36	40	44	50	NA
					Gas Heat Rise (°C)	15	16	17	18	19	20	22	24	28	NA
		High	Black	High Static Cooling Only	CFM	1222	1173	1123	1072	1021	967	912	853	787	712
					BHP	0.29	0.29	0.30	0.31	0.31	0.32	0.33	0.34	0.34	0.34
24060	25 - 55 (14 - 31)	Low†	Blue		CFM	640	553	454	310	---	---	---	---	---	---
					BHP	0.07	0.08	0.08	0.09	---	---	---	---	---	---
					Gas Heat Rise (°F)	NA	NA	NA	NA	NA	NA	NA	NA	NA	NA
					Gas Heat Rise (°C)	NA	NA	NA	NA	NA	NA	NA	NA	NA	NA
		Med-Low	Pink	Alternate Cooling Alternate Heating	CFM	830	758	688	607	514	393	254	---	---	---
					BHP	0.12	0.13	0.13	0.13	0.14	0.14	0.15	---	---	---
					Gas Heat Rise (°F)	54	NA	NA	NA	NA	NA	NA	NA	NA	NA
					Gas Heat Rise (°C)	30	NA	NA	NA	NA	NA	NA	NA	NA	NA
		Medium**	Red	Cooling Alternate Heating	CFM	1080	1025	969	910	852	787	718	638	541	457
					BHP	0.21	0.22	0.23	0.23	0.24	0.24	0.25	0.25	0.26	0.27
					Gas Heat Rise (°F)	41	44	46	49	52	NA	NA	NA	NA	NA
					Gas Heat Rise (°C)	23	24	26	27	29	NA	NA	NA	NA	NA
		Med-High‡	Orange	Heating Alternate Cooling	CFM	1101	1046	993	936	878	816	749	676	599	498
					BHP	0.22	0.23	0.24	0.24	0.25	0.26	0.26	0.27	0.27	0.28
					Gas Heat Rise (°F)	41	43	45	48	51	55	NA	NA	NA	NA
					Gas Heat Rise (°C)	23	24	25	26	28	30	NA	NA	NA	NA
		High	Black	High Static Cooling Only	CFM	1222	1173	1123	1072	1021	967	912	853	787	712
					BHP	0.29	0.29	0.30	0.31	0.31	0.32	0.33	0.34	0.34	0.34

Manufacturer reserves the right to change, at any time, specifications and designs without notice and without obligations.

Dry Coil Air Delivery* - Horizontal and Downflow Discharge Sizes 24-60 (Continued)

Unit Size	Heating Rise °F (°C)	Motor Speed	Tap	Allowable Functions	ESP (in. W.C.)	0.1	0.2	0.3	0.4	0.5	0.6	0.7	0.8	0.9	1
30040	25 - 55 (14 - 31)	Low†	Blue	Alternate Heating	CFM	643	552	455	348	225	---	---	---	---	---
					BHP	0.09	0.10	0.11	0.11	0.11	---	---	---	---	---
					Gas Heat Rise (°F)	46	54	NA	NA	NA	NA	NA	NA	NA	NA
					Gas Heat Rise (°C)	26	30	NA	NA	NA	NA	NA	NA	NA	NA
		Med-Low	Pink	Heating Alternate Cooling	CFM	817	744	673	597	516	431	325	190	---	---
					BHP	0.14	0.15	0.15	0.16	0.17	0.17	0.18	0.18	---	---
					Gas Heat Rise (°F)	36	40	44	50	NA	NA	NA	NA	NA	NA
					Gas Heat Rise (°C)	20	22	25	28	NA	NA	NA	NA	NA	NA
		Medium**	Red	Alternate Cooling Alternate Heating	CFM	1159	1104	1045	990	937	878	821	759	693	618
					BHP	0.31	0.32	0.33	0.33	0.34	0.35	0.36	0.37	0.37	0.38
					Gas Heat Rise (°F)	26	27	28	30	32	34	36	39	43	48
					Gas Heat Rise (°C)	14	15	16	17	18	19	20	22	24	27
		Med-High‡	Orange	Cooling Alternate Heating	CFM	1201	1147	1095	1037	987	934	877	818	755	671
					BHP	0.34	0.35	0.36	0.37	0.37	0.38	0.39	0.40	0.41	0.40
					Gas Heat Rise (°F)	25	26	27	29	30	32	34	36	39	44
					Gas Heat Rise (°C)	14	14	15	16	17	18	19	20	22	25
		High	Black	High Static Cooling Only	CFM	1291	1236	1181	1131	1080	1033	978	909	792	661
					BHP	0.41	0.42	0.43	0.43	0.44	0.45	0.46	0.45	0.43	0.40
30060	25 - 55 (14 - 31)	Low†	Blue		CFM	643	552	455	348	225	---	---	---	---	---
					BHP	0.09	0.10	0.11	0.11	0.11	---	---	---	---	---
					Gas Heat Rise (°F)	NA	NA	NA	NA	NA	NA	NA	NA	NA	NA
					Gas Heat Rise (°C)	NA	NA	NA	NA	NA	NA	NA	NA	NA	NA
		Med-Low	Pink	Alternate Cooling Alternate Heating	CFM	817	744	673	597	516	431	325	190	---	---
					BHP	0.14	0.15	0.15	0.16	0.17	0.17	0.18	0.18	---	---
					Gas Heat Rise (°F)	55	NA	NA	NA	NA	NA	NA	NA	NA	NA
					Gas Heat Rise (°C)	30	NA	NA	NA	NA	NA	NA	NA	NA	NA
		Medium**	Red	Heating Alternate Cooling	CFM	1159	1104	1045	990	937	878	821	759	693	618
					BHP	0.31	0.32	0.33	0.33	0.34	0.35	0.36	0.37	0.37	0.38
					Gas Heat Rise (°F)	39	40	43	45	48	51	54	NA	NA	NA
					Gas Heat Rise (°C)	21	22	24	25	26	28	30	NA	NA	NA
		Med-High‡	Orange	Cooling Alternate Heating	CFM	1201	1147	1095	1037	987	934	877	818	755	671
					BHP	0.34	0.35	0.36	0.37	0.37	0.38	0.39	0.40	0.41	0.40
					Gas Heat Rise (°F)	37	39	41	43	45	48	51	55	NA	NA
					Gas Heat Rise (°C)	21	22	23	24	25	27	28	30	NA	NA
		High	Black	High Static Cooling Only	CFM	1291	1236	1181	1131	1080	1033	978	909	792	661
					BHP	0.41	0.42	0.43	0.43	0.44	0.45	0.46	0.45	0.43	0.40

Manufacturer reserves the right to change, at any time, specifications and designs without notice and without obligations.

Dry Coil Air Delivery* - Horizontal and Downflow Discharge Sizes 24-60 (Continued)

Unit Size	Heating Rise °F (°C)	Motor Speed	Tap	Allowable Functions	ESP (in. W.C.)	0.1	0.2	0.3	0.4	0.5	0.6	0.7	0.8	0.9	1
36060	25 - 55 (14 - 31)	Low†	Blue	Alternate Cooling, Alternate Gas Heating	CFM	1096	1044	994	945	892	837	780	717	664	612
					BHP	0.14	0.15	0.16	0.18	0.19	0.19	0.20	0.21	0.22	0.23
					Gas Heat Rise (°F)	41	43	45	47	50	53	NA	NA	NA	NA
					Gas Heat Rise (°C)	23	24	25	26	28	30	NA	NA	NA	NA
		Med-Low	Pink	Gas Heating, Alternate Cooling	CFM	1151	1103	1056	1002	953	897	845	788	729	678
					BHP	0.16	0.17	0.18	0.19	0.20	0.21	0.22	0.23	0.24	0.25
					Gas Heat Rise (°F)	39	40	42	45	47	50	53	NA	NA	NA
					Gas Heat Rise (°C)	22	22	23	25	26	28	29	NA	NA	NA
		Medium**	Red	Alternate Cooling, Alternate Gas Heating	CFM	1299	1252	1204	1155	1106	1059	1007	959	905	844
					BHP	0.22	0.23	0.24	0.25	0.26	0.27	0.28	0.29	0.30	0.31
					Gas Heat Rise (°F)	34	36	37	39	40	42	44	47	49	53
					Gas Heat Rise (°C)	19	20	21	21	22	23	25	26	27	29
		Med-High‡	Orange	Cooling, Alternate Gas Heating	CFM	1382	1335	1292	1246	1202	1152	1106	1058	1007	957
					BHP	0.26	0.27	0.28	0.29	0.30	0.31	0.32	0.33	0.34	0.35
					Gas Heat Rise (°F)	32	33	35	36	37	39	40	42	44	47
					Gas Heat Rise (°C)	18	19	19	20	21	22	22	23	25	26
		High	Black	High Static Cooling Only	CFM	1530	1485	1442	1398	1354	1309	1263	1217	1169	1120
					BHP	0.33	0.35	0.36	0.37	0.38	0.39	0.40	0.41	0.42	0.43
36090	35 - 65 (19 - 36)	Low†	Blue	Alternate Cooling, Alternate Gas Heating	CFM	1096	1044	994	945	892	837	780	717	664	612
					BHP	0.14	0.15	0.16	0.18	0.19	0.19	0.20	0.21	0.22	0.23
					Gas Heat Rise (°F)	61	64	NA	NA	NA	NA	NA	NA	NA	NA
					Gas Heat Rise (°C)	34	36	NA	NA	NA	NA	NA	NA	NA	NA
		Med-Low	Pink	Alternate Cooling, Alternate Gas Heating	CFM	1151	1103	1056	1002	953	897	845	788	729	678
					BHP	0.16	0.17	0.18	0.19	0.20	0.21	0.22	0.23	0.24	0.25
					Gas Heat Rise (°F)	58	61	63	NA	NA	NA	NA	NA	NA	NA
					Gas Heat Rise (°C)	32	34	35	NA	NA	NA	NA	NA	NA	NA
		Medium**	Red	Gas Heating, Alternate Cooling	CFM	1299	1252	1204	1155	1106	1059	1007	959	905	844
					BHP	0.22	0.23	0.24	0.25	0.26	0.27	0.28	0.29	0.30	0.31
					Gas Heat Rise (°F)	52	53	56	58	61	63	NA	NA	NA	NA
					Gas Heat Rise (°C)	29	30	31	32	34	35	NA	NA	NA	NA
		Med-High‡	Orange	Cooling, Alternate Gas Heating	CFM	1382	1335	1292	1246	1202	1152	1106	1058	1007	957
					BHP	0.26	0.27	0.28	0.29	0.30	0.31	0.32	0.33	0.34	0.35
					Gas Heat Rise (°F)	48	50	52	54	56	58	61	63	NA	NA
					Gas Heat Rise (°C)	27	28	29	30	31	32	34	35	NA	NA
		High	Black	High Static Cooling Only	CFM	1530	1485	1442	1398	1354	1309	1263	1217	1169	1120
					BHP	0.33	0.35	0.36	0.37	0.38	0.39	0.40	0.41	0.42	0.43

Manufacturer reserves the right to change, at any time, specifications and designs without notice and without obligations.

Dry Coil Air Delivery* - Horizontal and Downflow Discharge Sizes 24-60 (Continued)

Unit Size	Heating Rise °F (°C)	Motor Speed	Tap	Allowable Functions	ESP (in. W.C.)	0.1	0.2	0.3	0.4	0.5	0.6	0.7	0.8	0.9	1
42060	25 - 55 (14 - 31)	Low†	Blue	Alternate Heating	CFM	956	899	843	786	729	676	621	558	504	435
					BHP	0.13	0.13	0.14	0.15	0.16	0.16	0.17	0.18	0.18	0.19
					Gas Heat Rise (°F)	47	50	53	NA	NA	NA	NA	NA	NA	NA
					Gas Heat Rise (°C)	26	28	29	NA	NA	NA	NA	NA	NA	NA
		Med-Low	Pink	Heating Alternate Cooling	CFM	1201	1153	1107	1060	1012	965	917	871	828	782
					BHP	0.21	0.22	0.22	0.23	0.24	0.25	0.26	0.27	0.28	0.29
					Gas Heat Rise (°F)	37	39	40	42	44	46	49	51	54	NA
					Gas Heat Rise (°C)	21	22	22	23	25	26	27	28	30	NA
		Medium**	Red	Alternate Cooling Alternate Heating	CFM	1443	1402	1361	1322	1284	1243	1204	1164	1124	1084
					BHP	0.32	0.33	0.34	0.35	0.36	0.37	0.38	0.39	0.40	0.42
					Gas Heat Rise (°F)	31	32	33	34	35	36	37	38	40	41
					Gas Heat Rise (°C)	17	18	18	19	19	20	21	21	22	23
		Med-High‡	Orange	Cooling Alternate Heating	CFM	1529	1491	1451	1411	1376	1338	1300	1261	1223	1185
					BHP	0.37	0.39	0.40	0.41	0.42	0.43	0.44	0.45	0.46	0.47
					Gas Heat Rise (°F)	29	30	31	32	32	33	34	35	36	38
					Gas Heat Rise (°C)	16	17	17	18	18	19	19	20	20	21
		High	Black	High Static Cooling Only	CFM	1604	1565	1529	1490	1455	1421	1385	1348	1310	1274
					BHP	0.42	0.44	0.45	0.46	0.47	0.48	0.49	0.50	0.51	0.52
42090	35 - 65 (19 - 36)	Low†	Blue		CFM	956	899	843	786	729	676	621	558	504	435
					BHP	0.13	0.13	0.14	0.15	0.16	0.16	0.17	0.18	0.18	0.19
					Gas Heat Rise (°F)	NA	NA	NA	NA	NA	NA	NA	NA	NA	NA
					Gas Heat Rise (°C)	NA	NA	NA	NA	NA	NA	NA	NA	NA	NA
		Med-Low	Pink	Alternate Cooling Alternate Heating	CFM	1201	1153	1107	1060	1012	965	917	871	828	782
					BHP	0.21	0.22	0.22	0.23	0.24	0.25	0.26	0.27	0.28	0.29
					Gas Heat Rise (°F)	56	58	60	63	NA	NA	NA	NA	NA	NA
					Gas Heat Rise (°C)	31	32	34	35	NA	NA	NA	NA	NA	NA
		Medium**	Red	Heating Alternate Cooling	CFM	1443	1402	1361	1322	1284	1243	1204	1164	1124	1084
					BHP	0.32	0.33	0.34	0.35	0.36	0.37	0.38	0.39	0.40	0.42
					Gas Heat Rise (°F)	46	48	49	51	52	54	56	58	60	62
					Gas Heat Rise (°C)	26	27	27	28	29	30	31	32	33	34
		Med-High‡	Orange	Cooling Alternate Heating	CFM	1529	1491	1451	1411	1376	1338	1300	1261	1223	1185
					BHP	0.37	0.39	0.40	0.41	0.42	0.43	0.44	0.45	0.46	0.47
					Gas Heat Rise (°F)	44	45	46	47	49	50	52	53	55	57
					Gas Heat Rise (°C)	24	25	26	26	27	28	29	29	30	31
		High	Black	High Static Cooling Only	CFM	1604	1565	1529	1490	1455	1421	1385	1348	1310	1274
					BHP	0.42	0.44	0.45	0.46	0.47	0.48	0.49	0.50	0.51	0.52

Manufacturer reserves the right to change, at any time, specifications and designs without notice and without obligations.

Dry Coil Air Delivery* - Horizontal and Downflow Discharge Sizes 24-60 (Continued)

Unit Size	Heating Rise °F (°C)	Motor Speed	Tap	Allowable Functions	ESP (in. W.C.)	0.1	0.2	0.3	0.4	0.5	0.6	0.7	0.8	0.9	1
48090	35 - 65 (19 - 36)	Low†	Blue		CFM	641	551	462	385	289	216	163	115	---	---
					BHP	0.05	0.06	0.06	0.07	0.07	0.08	0.08	0.09	---	---
					Gas Heat Rise (°F)	NA	NA	NA	NA	NA	NA	NA	NA	NA	NA
					Gas Heat Rise (°C)	NA	NA	NA	NA	NA	NA	NA	NA	NA	NA
		Med-Low‡	Pink	Heating Alternate Cooling	CFM	1437	1395	1351	1307	1265	1221	1176	1132	1084	1039
					BHP	0.29	0.30	0.31	0.32	0.33	0.34	0.35	0.36	0.37	0.38
					Gas Heat Rise (°F)	47	48	50	51	53	55	57	59	62	64
					Gas Heat Rise (°C)	26	27	28	28	29	30	32	33	34	36
		Medium**	Red	Cooling	CFM	1771	1735	1699	1664	1627	1592	1557	1522	1486	1450
					BHP	0.51	0.52	0.53	0.55	0.56	0.57	0.58	0.59	0.61	0.62
					Gas Heat Rise (°F)	NA	NA	NA	NA	NA	NA	NA	NA	NA	NA
					Gas Heat Rise (°C)	NA	NA	NA	NA	NA	NA	NA	NA	NA	NA
		Med-High	Orange	Alternate Cooling	CFM	1928	1897	1862	1830	1796	1764	1732	1698	1620	1512
					BHP	0.64	0.65	0.67	0.68	0.69	0.71	0.72	0.73	0.71	0.66
					Gas Heat Rise (°F)	NA	NA	NA	NA	NA	NA	NA	NA	NA	NA
					Gas Heat Rise (°C)	NA	NA	NA	NA	NA	NA	NA	NA	NA	NA
		High	Black	High Static Cooling Only	CFM	2212	2167	2124	2061	1976	1892	1794	1699	1567	1438
					BHP	0.97	0.99	1.00	0.97	0.95	0.91	0.86	0.82	0.77	0.71
48115	30 - 60 (17 - 33)	Low†	Blue		CFM	641	551	462	385	289	216	163	115	---	---
					BHP	0.05	0.06	0.06	0.07	0.07	0.08	0.08	0.09	---	---
					Gas Heat Rise (°F)	NA	NA	NA	NA	NA	NA	NA	NA	NA	NA
					Gas Heat Rise (°C)	NA	NA	NA	NA	NA	NA	NA	NA	NA	NA
		Med-Low	Pink	Alternate Cooling Alternate Heating	CFM	1437	1395	1351	1307	1265	1221	1176	1132	1084	1039
					BHP	0.29	0.30	0.31	0.32	0.33	0.34	0.35	0.36	0.37	0.38
					Gas Heat Rise (°F)	60	NA	NA	NA	NA	NA	NA	NA	NA	NA
					Gas Heat Rise (°C)	33	NA	NA	NA	NA	NA	NA	NA	NA	NA
		Medium**	Red	Cooling Alternate Heating	CFM	1771	1735	1699	1664	1627	1592	1557	1522	1486	1450
					BHP	0.51	0.52	0.53	0.55	0.56	0.57	0.58	0.59	0.61	0.62
					Gas Heat Rise (°F)	48	49	50	51	53	54	55	56	58	59
					Gas Heat Rise (°C)	27	27	28	29	29	30	31	31	32	33
		Med-High‡	Orange	Heating Alternate Cooling	CFM	1928	1897	1862	1830	1796	1764	1732	1698	1620	1512
					BHP	0.64	0.65	0.67	0.68	0.69	0.71	0.72	0.73	0.71	0.66
					Gas Heat Rise (°F)	44	45	46	47	48	49	49	50	53	57
					Gas Heat Rise (°C)	25	25	26	26	26	27	27	28	29	31
		High	Black	High Static Cooling Only	CFM	2212	2167	2124	2061	1976	1892	1794	1699	1567	1438
					BHP	0.97	0.99	1.00	0.97	0.95	0.91	0.86	0.82	0.77	0.71

Manufacturer reserves the right to change, at any time, specifications and designs without notice and without obligations.

Dry Coil Air Delivery* - Horizontal and Downflow Discharge Sizes 24-60 (Continued)

Unit Size	Heating Rise °F (°C)	Motor Speed	Tap	Allowable Functions	ESP (in. W.C.)	0.1	0.2	0.3	0.4	0.5	0.6	0.7	0.8	0.9	1
48130	35 - 65 (19 - 36)	Low†	Blue		CFM	641	551	462	385	289	216	163	115	---	---
					BHP	0.05	0.06	0.06	0.07	0.07	0.08	0.08	0.09	---	---
					Gas Heat Rise (°F)	NA	NA	NA	NA	NA	NA	NA	NA	NA	NA
					Gas Heat Rise (°C)	NA	NA	NA	NA	NA	NA	NA	NA	NA	NA
		Med-Low	Pink	Alternate Cooling	CFM	1437	1395	1351	1307	1265	1221	1176	1132	1084	1039
					BHP	0.29	0.30	0.31	0.32	0.33	0.34	0.35	0.36	0.37	0.38
					Gas Heat Rise (°F)	NA	NA	NA	NA	NA	NA	NA	NA	NA	NA
					Gas Heat Rise (°C)	NA	NA	NA	NA	NA	NA	NA	NA	NA	NA
		Medium**	Red	Cooling Alternate Heating	CFM	1771	1735	1699	1664	1627	1592	1557	1522	1486	1450
					BHP	0.51	0.52	0.53	0.55	0.56	0.57	0.58	0.59	0.61	0.62
					Gas Heat Rise (°F)	53	54	56	57	58	59	61	62	64	65
					Gas Heat Rise (°C)	30	30	31	32	32	33	34	34	35	36
		Med-High‡	Orange	Heating Alternate Cooling	CFM	1928	1897	1862	1830	1796	1764	1732	1698	1620	1512
					BHP	0.64	0.65	0.67	0.68	0.69	0.71	0.72	0.73	0.71	0.66
					Gas Heat Rise (°F)	49	50	51	52	53	54	55	56	58	62
					Gas Heat Rise (°C)	27	28	28	29	29	30	30	31	32	35
		High	Black	High Static Cooling Only	CFM	2212	2167	2124	2061	1976	1892	1794	1699	1567	1438
					BHP	0.97	0.99	1.00	0.97	0.95	0.91	0.86	0.82	0.77	0.71
60090	35 - 65 (19 - 36)	Low†	Blue		CFM	641	551	462	385	289	216	163	115	---	---
					BHP	0.05	0.06	0.06	0.07	0.07	0.08	0.08	0.09	---	---
					Gas Heat Rise (°F)	NA	NA	NA	NA	NA	NA	NA	NA	NA	NA
					Gas Heat Rise (°C)	NA	NA	NA	NA	NA	NA	NA	NA	NA	NA
		Med-Low‡	Pink	Heating Alternate Cooling	CFM	1437	1395	1351	1307	1265	1221	1176	1132	1084	1039
					BHP	0.29	0.30	0.31	0.32	0.33	0.34	0.35	0.36	0.37	0.38
					Gas Heat Rise (°F)	47	48	50	51	53	55	57	59	62	64
					Gas Heat Rise (°C)	26	27	28	28	29	30	32	33	34	36
		Medium**	Red	Cooling	CFM	1914	1881	1848	1814	1780	1748	1716	1681	1619	1512
					BHP	0.62	0.64	0.65	0.67	0.68	0.69	0.71	0.72	0.71	0.66
					Gas Heat Rise (°F)	NA	NA	NA	NA	NA	NA	NA	NA	NA	NA
					Gas Heat Rise (°C)	NA	NA	NA	NA	NA	NA	NA	NA	NA	NA
		Med-High	Orange	Alternate Cooling	CFM	1928	1897	1862	1830	1796	1764	1732	1698	1620	1512
					BHP	0.64	0.65	0.67	0.68	0.69	0.71	0.72	0.73	0.71	0.66
					Gas Heat Rise (°F)	NA	NA	NA	NA	NA	NA	NA	NA	NA	NA
					Gas Heat Rise (°C)	NA	NA	NA	NA	NA	NA	NA	NA	NA	NA
		High	Black	High Static Cooling Only	CFM	2212	2167	2124	2061	1976	1892	1794	1699	1567	1438
					BHP	0.97	0.99	1.00	0.97	0.95	0.91	0.86	0.82	0.77	0.71

Manufacturer reserves the right to change, at any time, specifications and designs without notice and without obligations.

Dry Coil Air Delivery* - Horizontal and Downflow Discharge Sizes 24-60 (Continued)

Unit Size	Heating Rise °F (°C)	Motor Speed	Tap	Allowable Functions	ESP (in. W.C.)	0.1	0.2	0.3	0.4	0.5	0.6	0.7	0.8	0.9	1
60115	30 - 60 (17 - 33)	Low†	Blue		CFM	641	551	462	385	289	216	163	115	---	---
					BHP	0.05	0.06	0.06	0.07	0.07	0.08	0.08	0.09	---	---
					Gas Heat Rise (°F)	NA	NA	NA	NA	NA	NA	NA	NA	NA	NA
					Gas Heat Rise (°C)	NA	NA	NA	NA	NA	NA	NA	NA	NA	NA
		Med-Low	Pink	Alternate Cooling Alternate Heating	CFM	1437	1395	1351	1307	1265	1221	1176	1132	1084	1039
					BHP	0.29	0.30	0.31	0.32	0.33	0.34	0.35	0.36	0.37	0.38
					Gas Heat Rise (°F)	60	NA	NA	NA	NA	NA	NA	NA	NA	NA
					Gas Heat Rise (°C)	33	NA	NA	NA	NA	NA	NA	NA	NA	NA
		Medium**	Red	Cooling Alternate Heating	CFM	1914	1881	1848	1814	1780	1748	1716	1681	1619	1512
					BHP	0.62	0.64	0.65	0.67	0.68	0.69	0.71	0.72	0.71	0.66
					Gas Heat Rise (°F)	45	45	46	47	48	49	50	51	53	57
					Gas Heat Rise (°C)	25	25	26	26	27	27	28	28	29	31
		Med-High‡	Orange	Heating Alternate Cooling	CFM	1928	1897	1862	1830	1796	1764	1732	1698	1620	1512
					BHP	0.64	0.65	0.67	0.68	0.69	0.71	0.72	0.73	0.71	0.66
					Gas Heat Rise (°F)	44	45	46	47	48	49	49	50	53	57
					Gas Heat Rise (°C)	25	25	26	26	26	27	27	28	29	31
		High	Black	High Static Cooling Only	CFM	2212	2167	2124	2061	1976	1892	1794	1699	1567	1438
					BHP	0.97	0.99	1.00	0.97	0.95	0.91	0.86	0.82	0.77	0.71
60130	35 - 65 (19 - 36)	Low†	Blue		CFM	641	551	462	385	289	216	163	115	---	---
					BHP	0.05	0.06	0.06	0.07	0.07	0.08	0.08	0.09	---	---
					Gas Heat Rise (°F)	NA	NA	NA	NA	NA	NA	NA	NA	NA	NA
					Gas Heat Rise (°C)	NA	NA	NA	NA	NA	NA	NA	NA	NA	NA
		Med-Low	Pink	Alternate Cooling	CFM	1437	1395	1351	1307	1265	1221	1176	1132	1084	1039
					BHP	0.29	0.30	0.31	0.32	0.33	0.34	0.35	0.36	0.37	0.38
					Gas Heat Rise (°F)	NA	NA	NA	NA	NA	NA	NA	NA	NA	NA
					Gas Heat Rise (°C)	NA	NA	NA	NA	NA	NA	NA	NA	NA	NA
		Medium**	Red	Cooling Alternate Heating	CFM	1914	1881	1848	1814	1780	1748	1716	1681	1619	1512
					BHP	0.62	0.64	0.65	0.67	0.68	0.69	0.71	0.72	0.71	0.66
					Gas Heat Rise (°F)	49	50	51	52	53	54	55	56	58	62
					Gas Heat Rise (°C)	27	28	28	29	29	30	31	31	32	35
		Med-High‡	Orange	Heating Alternate Cooling	CFM	1928	1897	1862	1830	1796	1764	1732	1698	1620	1512
					BHP	0.64	0.65	0.67	0.68	0.69	0.71	0.72	0.73	0.71	0.66
					Gas Heat Rise (°F)	49	50	51	52	53	54	55	56	58	62
					Gas Heat Rise (°C)	27	28	28	29	29	30	30	31	32	35
		High	Black	High Static Cooling Only	CFM	2212	2167	2124	2061	1976	1892	1794	1699	1567	1438
					BHP	0.97	0.99	1.00	0.97	0.95	0.91	0.86	0.82	0.77	0.71

Shaded areas indicate speed/static combinations that are not permitted for dehumidification speed.

* Air delivery values are without air filter and are for dry coil (See Wet Coil Pressure Drop Table).
† Factory-shipped continuous fan speed
‡ Factory-shipped heating speed
** Factory-shipped cooling speed
"High Static Cooling" = Only to be used for cooling function (not allowed for heating function)
NOTE: Deduct field-supplied air filter pressure drop and wet coil pressure drop to obtain static pressure available for ducting.

Manufacturer reserves the right to change, at any time, specifications and designs without notice and without obligations.

Wet Coil Pressure Drop (IN.W.C)

Unit Size	Standard CFM (SCFM)																
	600	700	800	900	1000	1100	1200	1300	1400	1500	1600	1700	1800	1900	2000	2100	2200
24	0.03	0.04	0.04	0.05	0.06												
30				0.05	0.06	0.07	0.08	0.11									
36				0.02	0.03	0.03	0.04	0.05	0.05								
42					0.05	0.05	0.04	0.05	0.05	0.06	0.07	0.07	0.08	0.09			
48, 60									0.05	0.06	0.07	0.07	0.08	0.09	0.10	0.12	0.13

Economizer with 1-in. Filter Pressure Drop (IN. W.C.)

Filter Size in. (mm)	Cooling Tons	Standard CFM (SCFM)																
		600	700	800	900	1000	1100	1200	1300	1400	1500	1600	1700	1800	1900	2000	2100	2200
600-1400 CFM 12x20x1+12x20x1 (305x508x25+305x508x25)	2.0, 2.5	-	-	0.09	0.14	0.16	0.18	0.25	0.28	0.30	-	-	-	-	-	-	-	-
1200-1800 CFM 16x24x1+14x24x1 (406x610x25+356x610x25)	3.5	-	-	-	-	-	-	0.10	0.11	0.12	0.13	0.14	0.16	0.16	-	-	-	-
1500-2200 CFM 16x24x1+18x24x1 (406x610x25+457x610x25)	3.0, 4.0, 5.0	-	-	-	-	-	-	-	-	-	0.15	0.17	0.18	0.20	0.21	0.22	0.23	0.23

Filter Pressure Drop Table (IN. W.C.)

Filter Size in. (mm)	Cooling Tons	Standard CFM (SCFM)																
		600	700	800	900	1000	1100	1200	1300	1400	1500	1600	1700	1800	1900	2000	2100	2200
600-1400 CFM 12x20x1+12x20x1 (305x508x25+305x508x25)	2.0, 2.5	0.03	0.05	0.06	0.08	0.10	0.11	0.13	0.14	0.16	-	-	-	-	-	-	-	-
1200-1800 CFM 16x24x1+14x24x1 (406x610x25+356x610x25)	3.5	-	-	-	-	-	-	0.07	0.08	0.09	0.09	0.10	0.11	0.12	-	-	-	-
1500-2200 CFM 16x24x1+18x24x1 (406x610x25+457x610x25)	3.0, 4.0, 5.0	-	-	-	-	-	-	-	-	-	0.04	0.06	0.08	0.10	0.11	0.13	0.14	0.15

Manufacturer reserves the right to change, at any time, specifications and designs without notice and without obligations.

TYPICAL PIPING AND WIRING

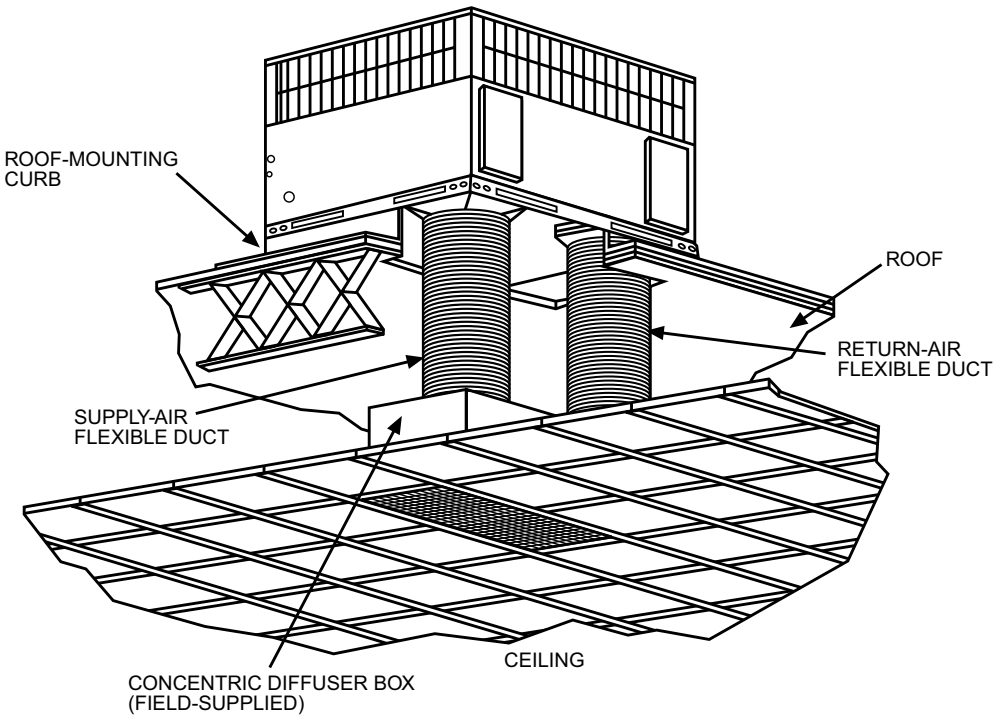

A09230

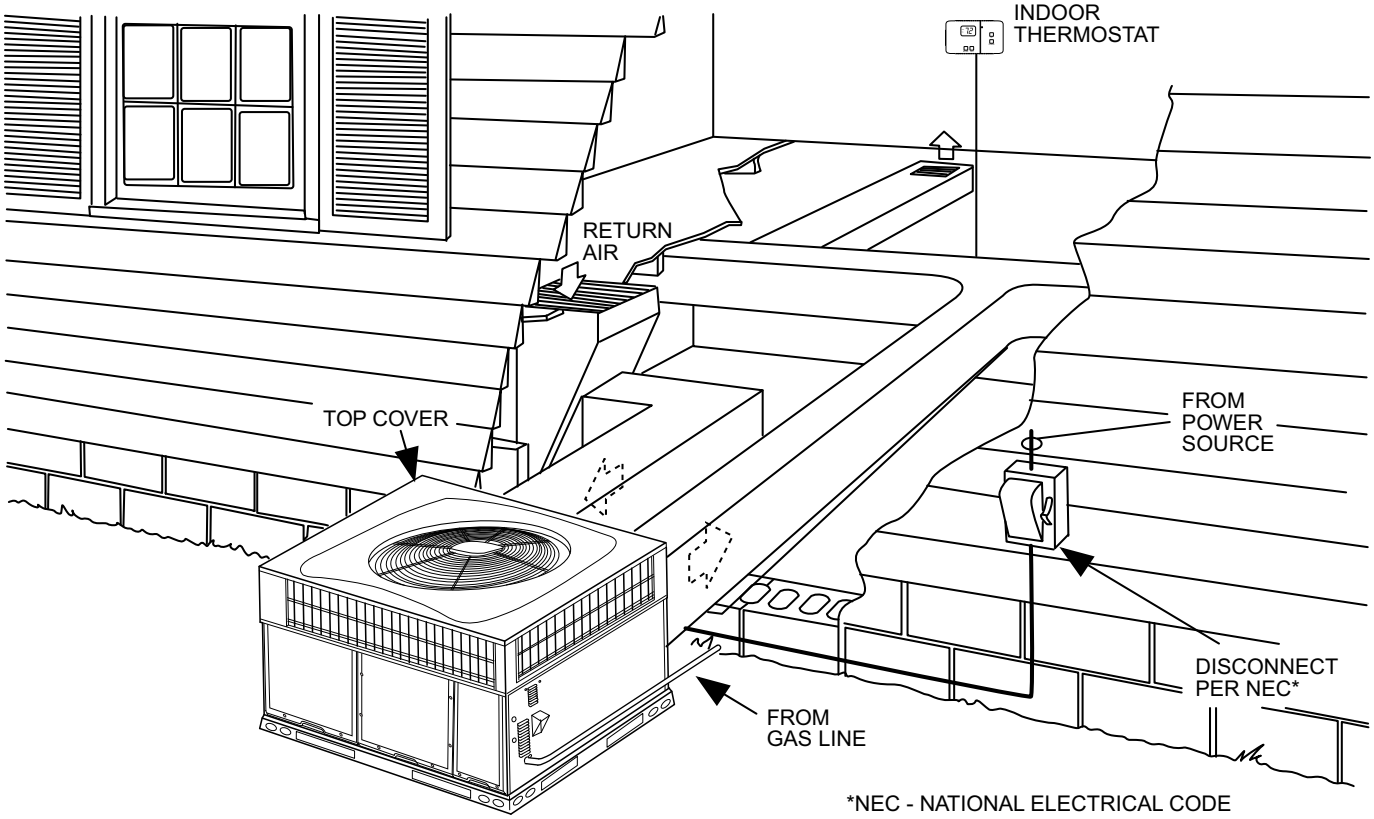

A09231

Application Data

Condensate trap — A 2-in. (50.8 mm) condensate trap must be field supplied.

Ductwork — Secure downflow discharge ductwork to roof curb. For horizontal discharge applications, attach ductwork to unit with flanges.

To convert a unit to downflow discharge — Units are equipped with factory-installed inserts in the down-flow openings. Removal of the inserts is similar to removing an electrical knock-out. Use the duct cover to seal the horizontal discharge openings in the unit. Units installed in horizontal discharge orientation do not require duct covers.

Airflow — Units are draw-thru in the cooling mode and blow-thru in the heating mode.

Maximum cooling airflow — To minimize the possibility of condensate blow-off from the evaporator, airflow through the units should not exceed 450 CFM per ton.

Minimum cooling airflow — Minimum cooling airflow is 350 cfm per ton.

Minimum ambient cooling operation temperature — All standard units have a minimum ambient operating temperature of 40°F (4°C). With accessory low ambient temperature kit, units can operate at temperatures down to 0°F (-17°C).

Minimum temperature — Air entering the heat exchanger in heating mode must be a minimum of 50°F (10°C) continuous and/or 45°F (7°C) intermittent.

Manufacturer reserves the right to change, at any time, specifications and designs without notice and without obligations.

Electrical Data

MODEL	NOMINAL V-PH-HZ	VOLTAGE RANGE		COMPRESSOR		OFM	IFM	IDM	POWER SUPPLY	
		MIN	MAX	RLA	LRA	FLA	FLA	FLA	MCA	MOCP
24040, 24060	208/230-1-60	197	253	9	63	0.72	3.9	0.65	15.9	20
30040, 30060	208/230-1-60	197	253	12.5	67	1.05	3.9	0.65	20.6	30
36060, 36090	208/230-1-60	197	253	14.4	86	1.05	3.8	0.65	22.9	35
42060, 42090	208/230-1-60	197	253	14.8	109	1.05	5.8	0.65	25.4	40
48090, 48115	208/230-1-60	197	253	19.4	102	1.05	6.9	0.65	32.3	50
48130	208/230-1-60	197	253	19.4	102	1.05	6.9	0.75	32.3	50
60090, 60115	208/230-1-60	197	253	22.6	148	1.05	6.9	0.65	36.3	50
60130	208/230-1-60	197	253	22.6	148	1.05	6.9	0.75	36.3	50

LEGEND

FLA - Full Load Amps
IDM - Inducer Motor
IFM - Indoor Fan Motor
LRA -Locked Rotor Amps
MCA - Minimum Circuit Amps
MOCP - Maximum Over Current Protection
OFM - Outdoor Fan Motor
RLA - Rated Load Amps

NOTES:

1. In compliance with NEC (National Electrical Code) requirements for multimotor and combination load equipment (refer to NEC Articles 430 and 440), the overcurrent protective device for the unit shall be Power Supply fuse or circuit breaker.
2. Minimum wire size is based on 60 C copper wire. If other than 60 C wire is used, or if length exceeds wire length in table, determine size from NEC.
3. Unbalanced 3-Phase Supply Voltage
   Never operate a motor where a phase imbalance in supply voltage is greater than 2%. Use the following formula to determine the percentage of voltage imbalance

   % Voltage imbalance

   $$= 100 \times \frac{\text{max voltage deviation from average voltage}}{\text{average voltage}}$$

EXAMPLE: Supply voltage is 230-3-60.

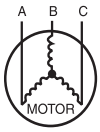

AB = 228 v
BC = 231 v
AC = 227 v

$$\text{Average Voltage} = \frac{228 + 231 + 227}{3} = \frac{686}{3} = 229$$

Determine maximum deviation from average voltage.
(AB) 229 - 228 = 1 v
(BC) 231 - 229 = 2 v
(AC) 229 - 227 = 2 v

Maximum deviation is 2 v.

Determine percent of voltage imbalance

$$\text{\% Voltage Imbalance} = 100 \times \frac{2}{229} = 0.8\%$$

This amount of phase imbalance is satisfactory as it is below the maximum allowable 2%.

IMPORTANT: If the supply voltage phase imbalance is more than 2%, contact your local electric utility company immediately.

A06564

Connection Wiring Schematic 208/230-1-60

CONNECTION WIRING DIAGRAM
DANGER: ELECTRICAL SHOCK HAZARD DISCONNECT POWER BEFORE SERVICING

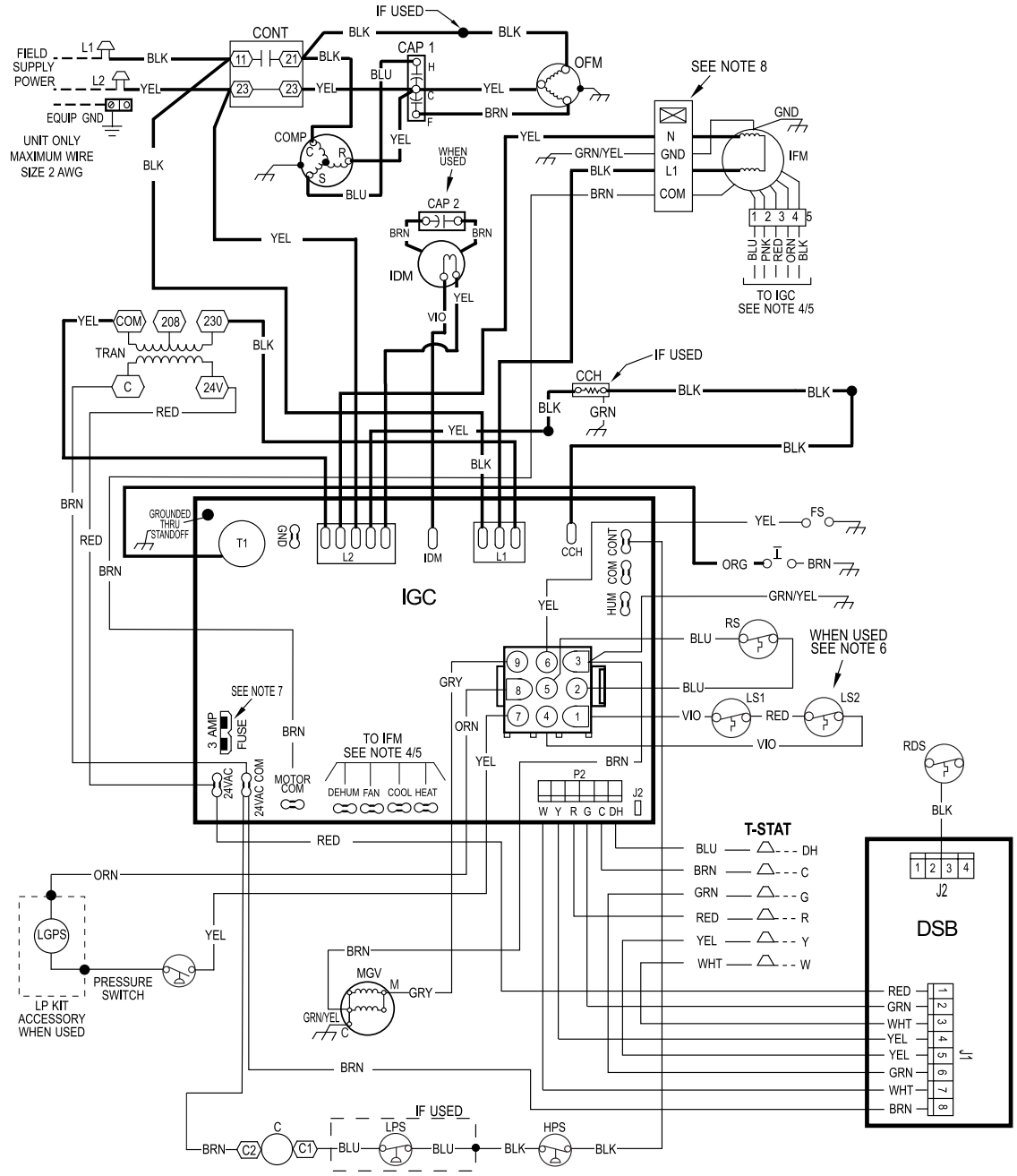

1Ø UNIT COMPONENT ARRANGEMENT

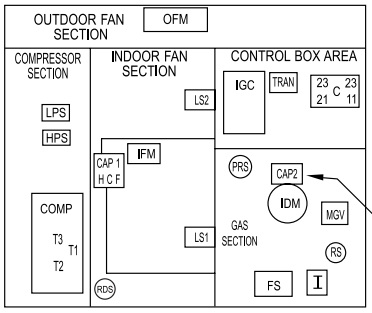

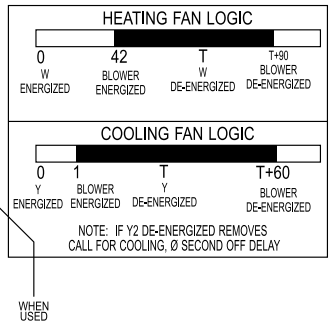

NOTES:

1. IF ANY OF THE ORIGINAL WIRES FURNISHED ARE REPLACED THEY MUST BE REPLACED WITH THE SAME WIRE OR IT'S EQUIVALENT.
2. SEE PRE-SALE LITERATURE FOR THERMOSTATS.
3. USE 75 DEGREES C COPPER CONDUCTORS FOR FIELD INSTALLATION.
4. REFER TO INSTALLATION INSTRUCTIONS FOR CORRECT SPEED SELECTION FOR IFM.
5. SEE INSTALLATION INSTRUCTIONS FOR PROPER HEATING AND COOLING CONNECTIONS FOR YOUR UNIT.
6. ON SOME MODELS LS1 AND LS2 ARE WIRED IN SERIES. ON OTHER MODELS ONLY LS1 IS USED.
7. THIS FUSE IS MANUFACTURED BY LITTLE FUSE, P/N 287003.
8. DO NOT DISCONNECT PLUG UNDER LOAD.
9. N.E.C. CLASS 2, 24V.

A240119

Ladder Wiring Schematic 208/230-1-60

LADDER WIRING DIAGRAM

DANGER: ELECTRICAL SHOCK HAZARD DISCONNECT POWER BEFORE SERVICING

LEGEND

	FIELD SPLICE		SPLICE (MARKED)		ACCESSORY OR OPTIONAL WIRING	CAP2	CAPACITOR, INDUCER (WHEN USED)	DSB	DISSIPATION BOARD
	TERMINAL (MARKED)		FACTORY LOW VOLTAGE		FACTORY HI VOLTAGE	CCH	CRANKCASE HEATER	EQUIP	EQUIPMENT
	TERMINAL (UNMARKED)		FIELD CONTROL WIRING	C	CONTACTOR	CHS	CRANKCASE HEATER SWITCH	FS	FLAME SENSOR
	SPLICE		FIELD POWER WIRING	CAP1	CAPACITOR, COMP	COMP	COMPRESSOR MOTOR	GND	GROUND

HPS	HIGH PRESSURE SWITCH	IGC	INTEGRATED GAS UNIT CONTROLLER	LS2	SECONDARY LIMIT SWITCH	RDS	REFRIG. DETECTION SENSOR
I	IGNITOR	LGPS	LOW GAS PRESSURE SWITCH (WHEN USED)	MGV	MAIN GAS VALVE	RS	ROLLOUT SWITCH
IDM	INDUCED DRAFT MOTOR	LPS	LOW PRESSURE SWITCH	OFM	OUTDOOR FAN MOTOR	TRAN	TRANSFORMER
IFM	INDOOR FAN MOTOR	LS1	PRIMARY LIMIT SWITCH	OT	QUADRUPLE TERMINAL	T-STAT	THERMOSTAT

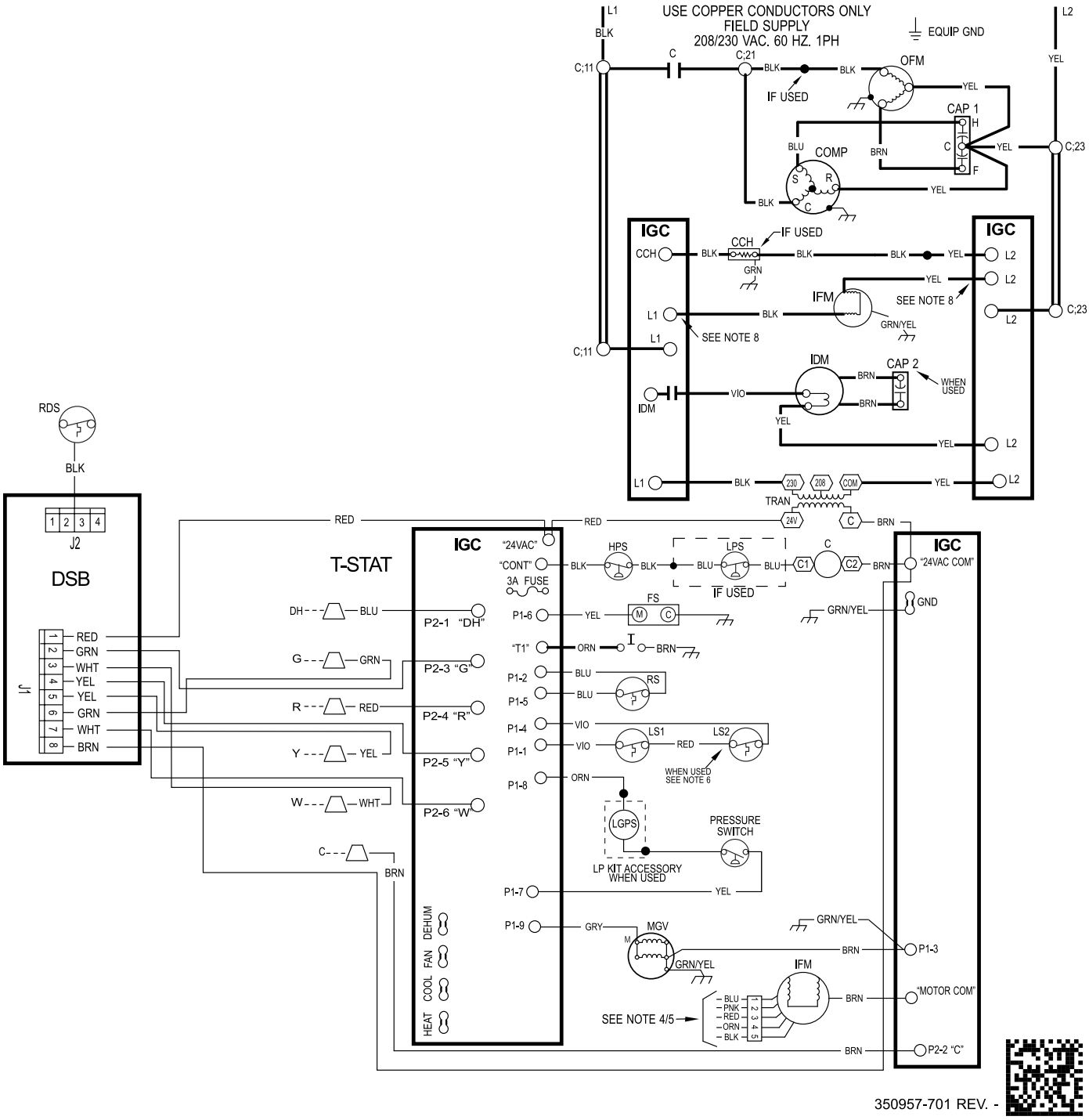

Controls

Operating sequence

Heating On a call for heating, terminal W of the thermostat is energized, starting the induced-draft motor for a 5 second pre-purge. When the pressure switch senses that the induced-draft motor is moving sufficient combustion air, the burner sequence begins. his function is controlled by the integrated gas unit controller (IGC). The indoor (evaporator) –fan motor is energized 30 seconds after flame is established. When the thermostat is satisfied and W is de-energized, the burners stop firing and the indoor (evaporator) fan motor shuts off after a 90 second time-off delay. Please note that the IGC has the capability to automatically reduce the indoor fan motor on delay and increase the indoor fan motor off delay in the event of high duct static and/or a partially-clogged filter.

Cooling — When the system thermostat calls for cooling, 24 V is supplied to the “Y” and “G” terminals of the thermostat. This completes the circuit to the contactor coil (C) and indoor (evaporator) fan relay (IFR). The normally open contacts of energized C close and complete the circuit through compressor motor (COMP) to outdoor (condenser) fan motor (OFM). Both motors start instantly. The set of normally open contacts of energized IFR close and complete the circuit through IFM. The IFM starts instantly.

On the loss of the thermostat call for cooling, 24 V is removed from both the “Y” and “G” terminals (provided the fan switch is in the “AUTO” position) de-energizing the compressor contactor and opening the contacts supplying power to compressor/OFM. After a 60-second delay (1-phase) the IFM shuts off. If the thermostat fan selector switch is in the “ON” position, the IFM will run continuously.

NOTE: On units with a Time Guard II device: Once the compressor has started and then stopped, it cannot be restarted again until 5 minutes have elapsed.

Guide Specifications

Packaged Gas Heating/Electric Cooling Units Constant Volume Application

HVAC Guide Specifications

Size Range:**2 to 5 Tons, Nominal Cooling**
40,000 to 127,000 Btuh,
Nominal Heating Input

General

SYSTEM DESCRIPTION

Outdoor rooftop mounted, gas heating/electric cooling unit utilizing a hermetic scroll compressor for cooling duty. Unit shall discharge supply air vertically or horizontally as shown on contract drawings. Condenser fan/coil section shall have a draw-thru design with vertical discharge for minimum sound levels.

QUALITY ASSURANCE

- Unit shall be rated in accordance with AHRI Standards 210/240 and 270-1995.
- Unit shall be designed and certified in accordance with UL Standard 60335-2-40, 60335-1 and CSA/ANSI Z21.47.
- Unit shall be manufactured in a facility registered to ISO 9001 manufacturing quality standard.
- Roof curb shall be designed to conform to NRCA Standards.
- Insulation and adhesives shall meet NFPA 90.1 requirements for flame spread and smoke generation.
- Cabinet insulation shall meet ASHRAE Standard 62.2.

DELIVERY, STORAGE AND HANDLING

- Unit shall be stored and handled per manufacturer's recommendations.

Products

EQUIPMENT

General:

Factory-assembled, single-piece, heating and cooling unit. Contained within the enclosure shall be all factory wiring, piping, controls, refrigerant charge with R-454B refrigerant, and special features required prior to field start-up.

Unit Cabinet:

- Unit cabinet shall be constructed of phosphated, zinc-coated, pre-painted steel capable of with-standing 500 hours in salt spray.
- Normal service shall be through 3 removable cabinet panels.
- The unit shall be constructed on a rust proof unit base that has an externally trapped, integrated sloped drain.
- Evaporator fan compartment top surface shall be insulated with a minimum 1/2-in. (12.7 mm) thick, flexible fiberglass insulation, coated on the air side and retained by adhesive and mechanical means. The evaporator wall sections will be insulated with a minimum semi-rigid foil-faced board capable of being wiped clean. Aluminum foil-faced fiberglass insulation shall be used in the entire indoor air cavity section.
- Unit shall have a field-supplied condensate trap.

Fans:

- The evaporator fan shall be a multi-speed, direct-drive, as shown on equipment drawings.
- Fan wheel shall be made from steel, be double-inlet type with forward curved blades with corrosion resistant finish. Fan wheel shall be dynamically balanced.
- Condenser fan shall be direct drive propeller type with aluminum blades riveted to corrosion resistant steel spiders, be dynamically balanced, and discharge air vertically.

Compressor:

- Fully hermetic compressors with factory-installed vibration isolation.

Coils:

- Aluminum tubes on indoor coil. Copper tubes on outdoor coil.

Heating Section:

- Induced-draft combustion type with energy saving direct spark ignition system and redundant main gas valve.
- Induced-draft motors shall provide adequate airflow for combustion.
- The heat exchangers shall be constructed of stainless steel for corrosion resistance.
- Burners shall be of the in-shot type constructed of aluminum coated steel.
- All gas piping and electric power shall enter the unit cabinet at a single location.

Refrigerant Components:

Refrigerant expansion device shall be of the TXV (thermostatic expansion valve) or fixed orifice type.

Filters:

Filter section shall consist of field-installed, throwaway, 1-in. (25 mm) thick fiberglass filters of commercially available sizes.

Controls and Safeties:

- Unit controls shall be complete with a self-contained low voltage control circuit.
- Compressors shall incorporate a solid-state compressor protector that provides reset capability.

Operating Characteristics:

- Unit shall be capable of starting and running at 125°F (51°C) ambient outdoor temperature per maximum load criteria of AHRI Standard 210.
- Compressor with standard controls shall be capable of operation down to 40°F (4°C) ambient outdoor temperature.
- Units shall be provided with fan time delay to prevent cold air delivery before the heat exchanger warms up.
- Unit shall be provided with 60-second fan time delay (single phase models) or 90 second fan time delay (three phase models) after the thermostat is satisfied.

Electrical Requirements:

All unit power wiring shall enter the unit cabinet at a single location.

Motors:

- Compressor motors shall be of the refrigerant-cooled type with line-break thermal and current overload protection.
- All fan motors shall have permanently lubricated bearings, and inherent, automatic reset, thermal overload protection.
- Condenser fan motor shall be totally enclosed.
- Evaporator Fan Motor to be ECM Motor.

Compressor Protection:

Solid-state control shall protect compressor by preventing "short cycling."

Manufacturer reserves the right to change, at any time, specifications and designs without notice and without obligations.

Guide Specifications (Continued)

Low NOx:

Shall provide NOx reduction to meet 40 ng/J NOx emissions requirements as shipped from the factory.

Accessory Kits Available:

1. Compressor Start Kit (single phase units only):
   Shall provide additional starting torque for single-phase compressors.
2. Crankcase Heater:
   Shall provide anti-floodback protection for low-load cooling applications.
3. Economizer:
   (Horizontal - Field installed accessory)
   (Vertical - Field installed accessory)
   a. Economizer controls capable of providing free cooling using outside air.
   b. Equipped with low leakage dampers not to exceed 3% leakage, at 1.0 IN. W.C. pressure differential.
   c. Spring return motor shuts off outdoor damper on power failure.
4. Filter Rack Kit:
   Shall provide filter mounting for downflow applications. Offered as a field installed accessory.
5. Flat Roof Curb:
   Curbs shall have seal strip and a wood nailer for flashing and shall be installed per manufacturer's instructions.
6. Flue Discharge Deflector
   Directs flue gas exhaust; 90 degrees upward from current discharge.
7. High Altitude Propane Conversion Kit:
   Shall consist of all required hardware to convert to propane gas heat operation at 2001 to 6000 ft (611 to 1829 m) above sea level.
8. Low Ambient Package:
   Pressure-based control to allow cooling operation down to 0° F (-17.7°C).
9. Manual Outdoor Air Damper:
   Package shall consist of damper, birdscreen, and rainhood which can be preset to admit outdoor air for year-round ventilation.
10. Natural-to-Propane Conversion Kit:
    Shall be complete with all required hardware to convert to propane gas operation at 10.0 IN. W.C. manifold pressure.
11. Propane-to-Natural Conversion Kit
    Shall be complete with all hardware to convert to natural gas at standard altitude (0 to 2000 ft [0 to 610 m] above sea level).
12. Square-To-Round Duct Transitions (24-48 models):
    Shall have the ability to convert the supply and return openings from rectangular to round.
13. Louver Metal Outdoor Coil Grille
    Shall provide hail and vandalism protection. Available as a field installed accessory.
14. Low Pressure Switch Kit
    Kit is designed for use when a low pressure control in desired. This kit provides added reliability for the compressor.

© 2025 Carrier. All rights reserved.

Manufacturer reserves the right to change, at any time, specifications and designs without notice and without obligations.